Evo T Double

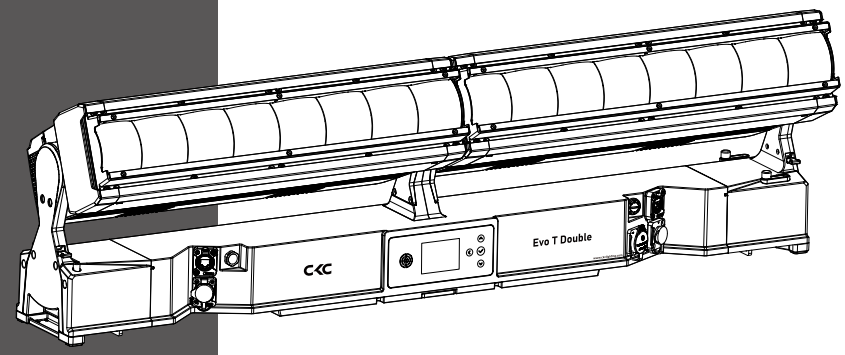

www.ckclighting.com

Before carrying out any installation, maintenance, or cleaning of the lighting fixtures, please confirm that the power has been cut off! Before using this fixture, please read this manual. Our company reserves the right to change product design and specifications without prior notice.

CKC LIGHTING CO.,LTD

335 Nansha Avenue, Tung Chung Town,
Nansha District, Guangzhou City, China.
TEL：(020)3920 4506 FAX：(020)3920 4631
WEB：www.ckclighting.com

CONTENTS

1. Security Warning Information 1

2. Product Introduction 3

2.1 Dimensional drawings 3
2.2 Fixture packaging accessories 3

3. Main technical parameters of the equipment 3

4. Packaging and transportation 4

4.1 Disassemble packaging 4
4.2 Equipment installation 4

5. Installation Requirements Explanation 5

5.1 Clamp installation 5
5.2 Installation of accessories 6
5.3 Equipment installation 7
5.4 Hanging Installation Diagram 7

6. Power and signal connection 8

6.1 Power and signal socket 8
6.2 Power Connect 8
6.3 Signal Connect 9

7. Control panel 10

7.1 Panel Introduction 10
7.2 System menu 11

8. DMX control channel table 13

9. Control circuit diagram 23

10. Regular maintenance 23

10.1 Cleaning and maintenance 23
10.2 Fault analysis and handling 24

www.ckclighting.com

★ Statement ★

- This manual contains important information on safe use and installation. Please read it carefully and follow the requirements for operation and installation. Please keep this manual properly;
- The equipment has good performance and complete packaging when it leaves the factory. The operator should strictly follow the warning items and operating instructions stated in the manual. Any malfunction or damage caused by misuse or neglect of the manual is not within the scope of our company's responsibility and warranty;
- The relevant information in this manual is for reference only. All lighting products are subject to the actual product. Any changes will not be notified separately, and our company reserves the right of final interpretation.

1. Security Warning Information

Attention !

Please read the safety requirements information in this section carefully before installing, powering on, operating, or repairing the lighting fixtures.

- This product is for professional use and is not suitable for other purposes;
- After receiving the lighting fixtures, please check if the packaging is complete and unpack to check if the equipment has been damaged due to transportation. If there is any damage caused by transportation, please do not use this lamp and contact local technicians or manufacturers as soon as possible;
- When transporting again, please use the original packaging materials;
- If there is obvious damage to the machine casing, it should be replaced in a timely manner;
- When hanging lamps, it is necessary to verify that the hanging equipment can withstand more than 6 times the weight of the lamp. After installation, it is necessary to verify that the lamp cover and installation buckle are secure and undamaged. At the same time, a safety rope should be used as an auxiliary safety for the lamp and fixed on the truss;
- The light source inside this luminaire should be replaced by the manufacturer, its service agent, or a similarly qualified person;
- If you have any other questions about how to safely operate the equipment, please contact our technical personnel or call our service hotline;
- This product has a protection level of IP55 and Suitable for indoor use or short-term outdoor use
- Avoid direct external strong light shining on the lens, which may cause the lens to focus and burn out internal components.

- Lighting fixtures should be kept clean and avoid prolonged use in overheated or dusty environments to prevent contact with chemical liquids;
- When using the product, attention should be paid to avoiding serious or fatal injuries caused by fire, heat, electrical shock, and ultraviolet radiation. Before powering on or installing, read the instruction manual first. Follow the safety precautions for operation and pay attention to the warning signs on the instructions and equipment;
- Only professionals are allowed to install, operate, and maintain lighting fixtures, and strictly follow the procedures stated in the operating instructions.

- The eyes cannot directly look at the luminous object;
- Do not connect this device to any dimmer;
- If visible damage occurs to the protective casing, lens, and display screen on the lighting fixture, it is considered as damage to the point of loss;
- Please do not place any filters or other items at the light outlet, and do not replace non original parts;
- The minimum safe illumination distance of the lamp is 10m.

- Before installation, please confirm that the power supply voltage used matches the voltage indicated on the light fixture. Each lighting fixture should be properly grounded and electrically installed according to relevant standards;
- Please disconnect the power before repairing or cleaning the equipment;
- During the operation of the lighting fixtures, touching the wires is prohibited to prevent electric shock;
- If the external soft cable or wire of this lamp is damaged, the wire should be replaced by the manufacturer, its agent, or a similarly qualified person to avoid danger;
- Avoid flammable liquids, water, or metal conductors from entering the interior of the lamp to prevent electric shock or fire. If any foreign objects enter the lamp, immediately cut off the power supply;
- When multiple lamps are operated in series, the signal lines can be connected in multiple ways, but the power supply must be connected separately.

- The lighting fixtures work normally at -20 ℃ to 45 ℃ . When replacing any components or accessories in the equipment, ensure that the power is disconnected to prevent electric shock and injury;
- The maximum surface temperature of the lamp during operation can reach 70 ℃ , please do not touch it with bare hands.

- The lighting fixtures must be installed in a sufficiently ventilated area, at least 0.5m away from adjacent surfaces, to ensure that no ventilation holes are blocked;
- Do not install the lighting fixtures directly on flammable objects;
- The minimum distance between all outer surfaces of the lamp and combustible materials is 0.5m.

www.ckclighting.com

2. Product Introduction

2.1 Exterior dimensions of lighting fixtures

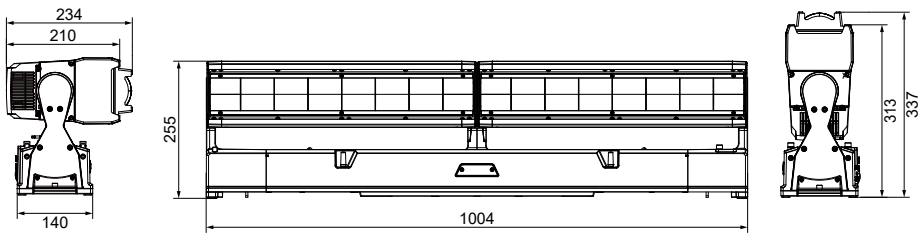

1004 × 140 × 337 mm

2.2 Packaging accessories

Name	QTY
Omega bracket	2 PCS
Clamp	2 PCS
Safety cable	1 PCS

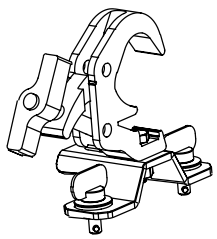

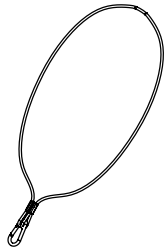

3. Main technical parameters of the equipment

Product execution standards：GB43472-2023、GB/T7000.1-2023、GB/T7000.217-2023

- **Electrical paramete**

Rated input voltage：AC 100V-240V~ 50Hz/60Hz
Power：1300W Power factor：0.99F Input Current：5.55A 220V

- **LED lifespan**

> 20000 hours

- **Optical system**

Source: 16×60W(RGBL) + 32×10W(CW)
Zoom Range：3° ~54°
CCT：2400K~8500K
Output: 24000Lm

- **Tilt**

Tilt: 210° 8bit/16bit

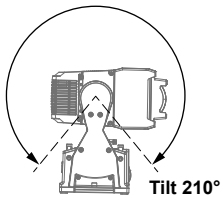

- **Control and programming**

Channel：24CH/33CH/121CH
Protocal:DMX512，RDM，ArtNet/sACN
Data connector: 3 PIN (or 5 PIN) XLR,RJ45

- **Illumination draw**

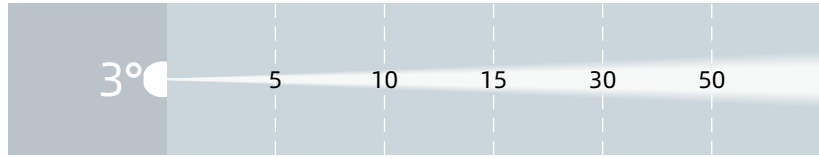

Lux	25700	10300	6670	450	162
Distance(m)	0.26	0.52	0.79	1.57	2.62

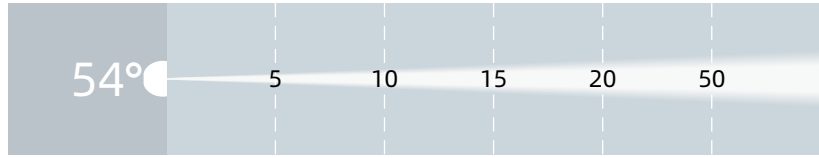

Lux	2560	624	288	160	26
Distance(m)	5.10	10.19	15.29	20.38	50.95

- **Other effect function**

Fast electronic strobe：1~25Hz LED refresh rate：1200Hz~25KHz

- **Other features and functions**

Weight：24.7 KG

4. Packaging and transportation

4.1 Disassemble packaging

Notice：After receiving the fixture, please unpack and check for any damage caused by transportation. If there is any damage caused by transportation, please do not use this fixture and contact the local technical personnel or manufacturer as soon as possible.

4.2 Equipment packaging

1). Disconnect the power supply before packaging the lighting fixtures to allow them to cool completely;
2). Flight cases can only be stacked in two layers and are not allowed to be reversed.

www.ckclighting.com

5. Installation Requirements Explanation

5.1 Clamp install

The lighting fixtures can be installed on the stage or on any direction of the truss, and the clamp can be quickly and easily locked onto the truss.

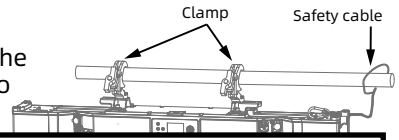

Waining !

The lighting fixtures are divided into two versions: integrated light hook and normal. When using the integrated light hook version, the clamp is broken up and locked onto the truss. The normal version must use 2 clamps to secure the device and fasten it with a 1/4 rotation. Regardless of the version, one safety rope must be added and connected to the base hole, but be careful not to connect it to the handling handle.

Quick lock and clamp install

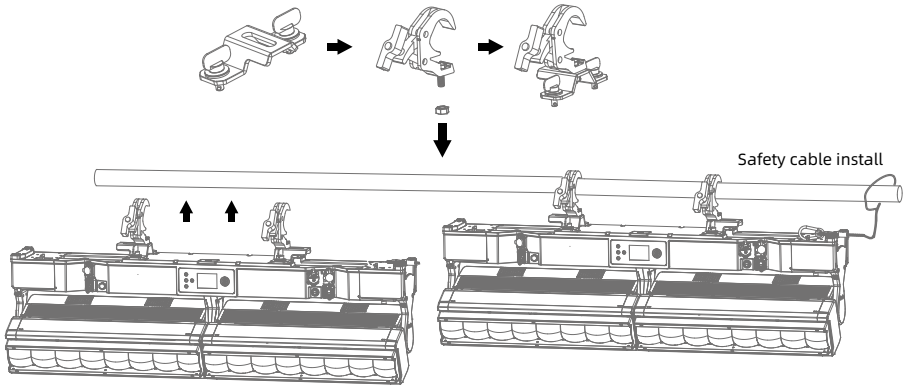

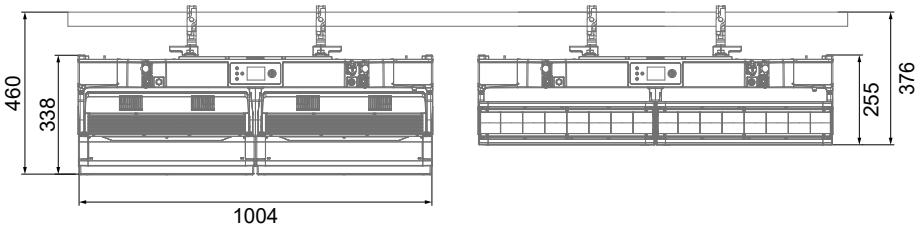

5.2、Installation of accessories

Installation of the Top Cover

The partition accessory comes with 6 Phillips-head self-tapping screws, which should be used to secure it to the body, as shown in the figure.

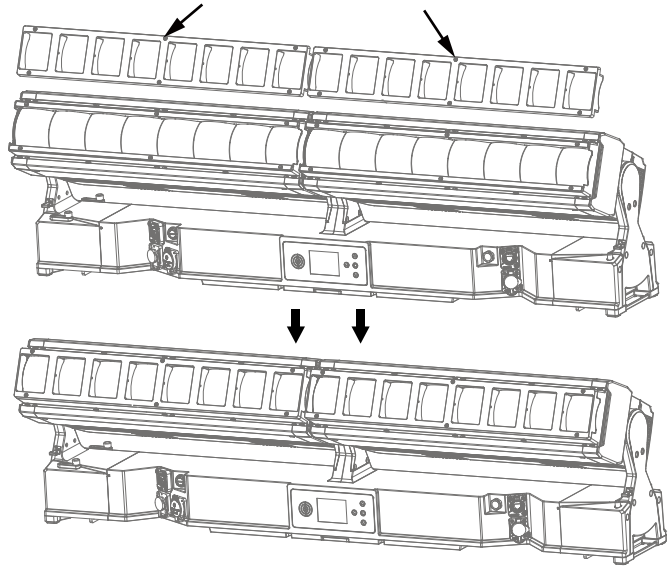

Installation of the Forest Filter Assembly

The acrylic accessory comes with 6 Phillips-head self-tapping screws, which should be used to secure it to the body, as shown in the figure.

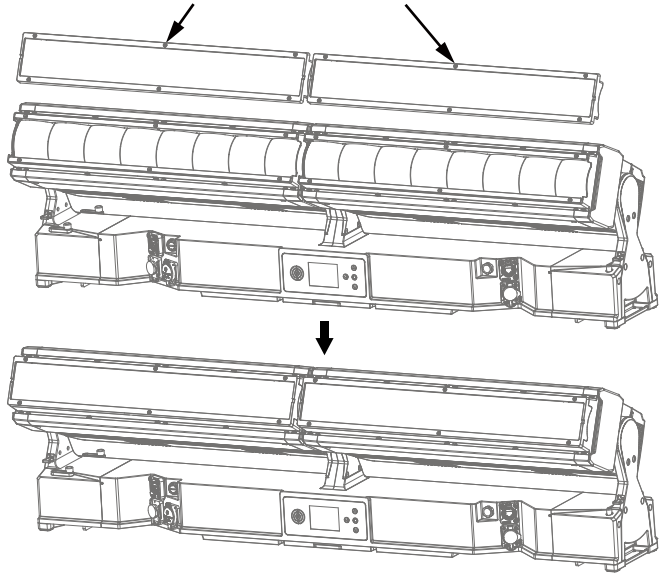

www.ckclighting.com

5.3 Equipment installation

1). Before installation, it is necessary to verify that the lamp hook and safety rope are not damaged, and that the installation object can withstand 6 times the total weight of the lamp and cable accessories;
2). Install the quick lock clamp on the base of the lamp body. Insert the clamp horizontally into the mounting hole of the base, rotate it clockwise 1/4 turn to lock it, and install the second clamp using the same method (the shape of the clamp should be based on the actual product).

5.4 Hanging Installation Diagram

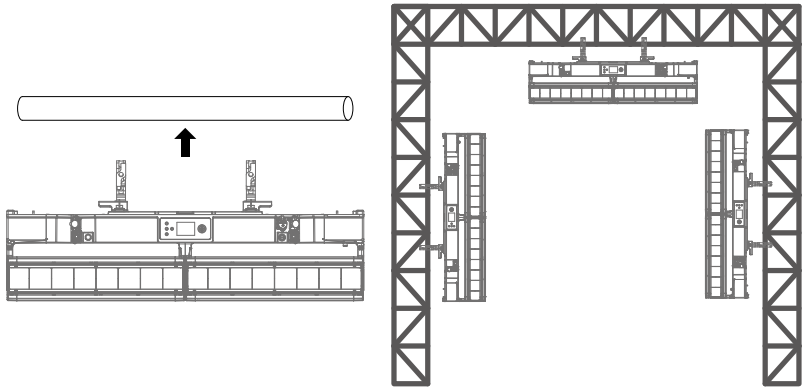

Reminder: External beam source may damage internal lighting fixtures

External beams from direct sunlight, lighting fixtures, and lasers that are directly focused onto the casing or penetrate the lens to illuminate the interior of the fixture may cause damage to the components. This is a common issue with all lighting fixtures and does not occur alone with CKC products. Although there is no way to completely prevent this problem from occurring, following the following guidelines can prevent potential damage.

When unpacking, installing, using, and stopping the operation of the lighting fixtures, please do not expose the transparency of the fixtures the mirror is exposed to direct sunlight, other lighting fixtures, or laser beams,Do not directly focus the beam of this device onto another lighting fixture.

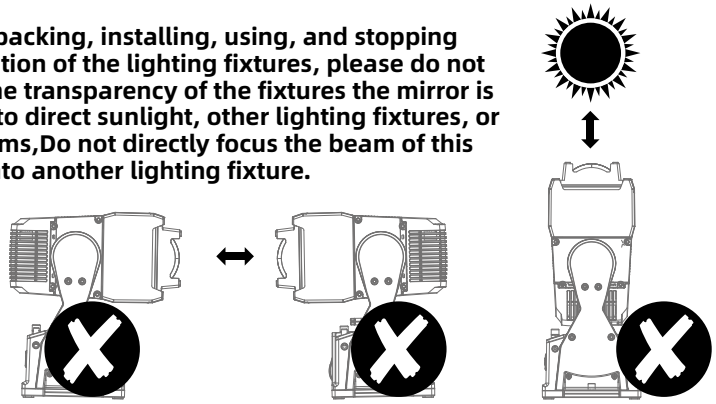

6. Power、Signal connect

6.1 Power and signal socket

1. RJ45 IN
2. 3 PIN (or 5 PIN) XLR IN
3. Power input
4. Fuse holder
5. Ventilation valve
6. 3 PIN (or 5 PIN) XLR OUT
7. RJ45 OUT

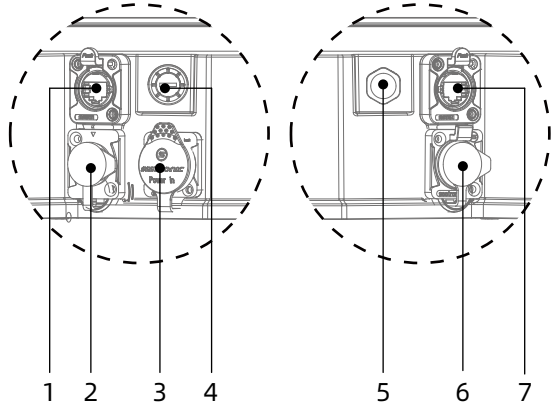

6.2 Power connect

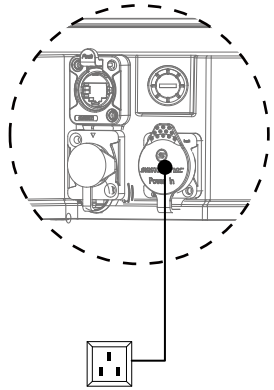

Connection method:

L(live wire) - brown wire
E(Ground wire) - yellow/green dual color line
N(Zero Line) - Blue Line

When connecting the power supply, please note that the voltage and frequency of the power supply must match the voltage and frequency marked on the light fixture. When multiple fixtures are used simultaneously, it is recommended to connect the power supply of each fixture separately, so that each fixture can be individually controlled for power on/off.

Attention: When connecting the power supply, the ground wire (yellow/green dual color wire) must be safely grounded and comply with all relevant electrical installation standards.

Power In

This product uses Powercon In/Out to connect power cable. Due to power limitations, a 2mm power cable can drive up to 1 fixtures at 240V .

Waining !

- Do not connect too many fixtures or overload a single power cord;
- Do not use power cords with damaged insulation layers, and do not place power cords on other wires;
- When the fixture is not in use or cleaned, please unplug the power cord; Do not forcefully unplug or drag the power cord directly.

www.ckclighting.com

6.3 Signal connect

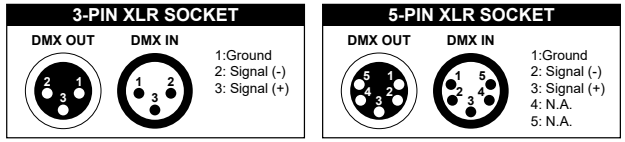

The lighting fixtures are equipped with standard DMX XLR and RJ-45 input and output sockets. Please use DMX512 shielded twisted pair signal cables or Category 5 or above network twisted pair cables for connection. The typical connection distance for DMX signal lines is 150 meters. When transmitting signals over long distances, a DMX512 signal amplifier must be added.

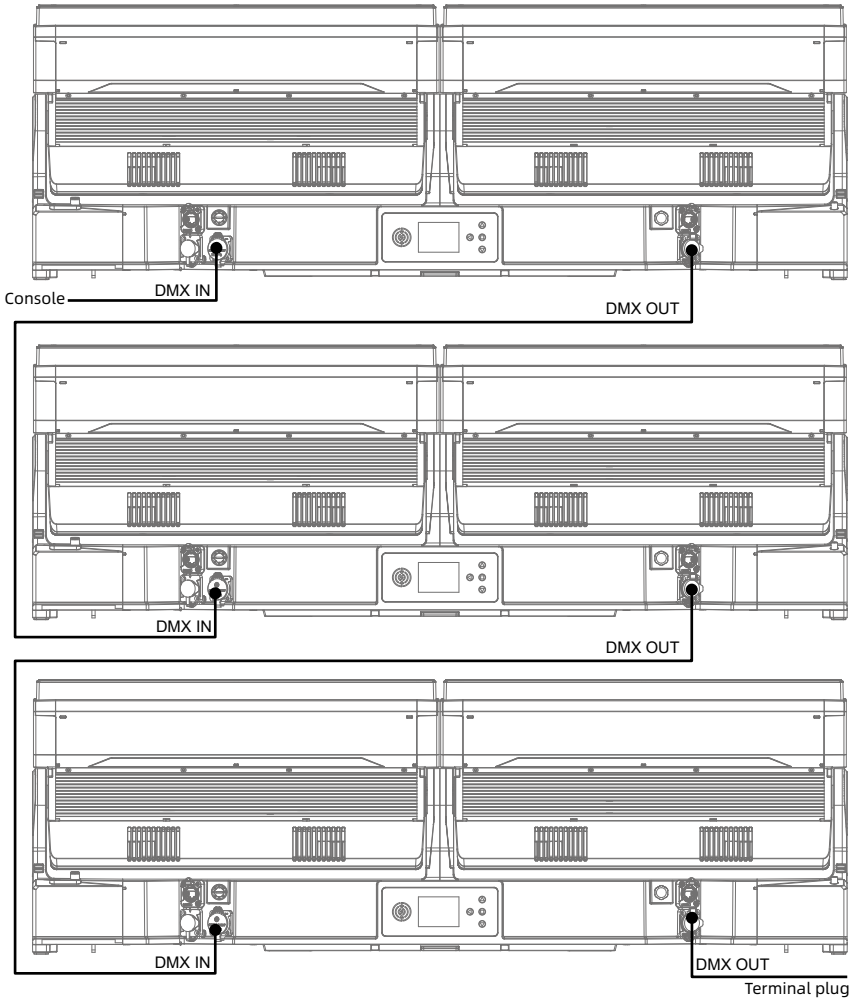

Connect a shielded twisted pair signal cable from the DMX output port of the controller to the DMX input port of the first device, and from the DMX output port of the first device to the DMX input port of the second device, and so on, until all the lamps are connected. Then install a terminal plug on the last 3 or 5 pin socket of each connected lamp output. (Weld a 4/1W, 120 Ω resistor between the 2 and 3 pins of a 3 or 5 core pin XLR plug).

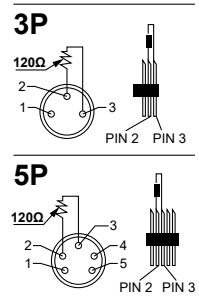

7. Control panel

7.1 Panel Introduction

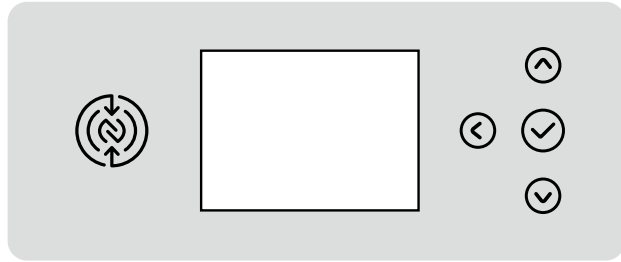

- Adopts a 2.4-inch LCD display and a touch-sensitive keypad operation panel;
- NFC: The lighting fixtures do not require power on and can be directly set up, diagnosed, and perform other functions through the CKC app;
- Use the up and down arrow keys to select the function menu in the direction indicated by the arrow. Press the checkmark button to confirm your selection. You will enter the corresponding sub-menu of the menu. Each menu item represents a specific function of the lamp (see the table below for details);
- Press the checkmark button (confirm) to save your modifications or enter the sub-menu. Use the up and down keys to modify the values (increase or decrease the values);
- Press the left arrow key to return to the previous menu or exit.

www.ckclighting.com

7.2、System menu

Note: The gray color block is the default setting value

	Software Update Please Wait... EthernetRst Please Wait... CKC Evo T Double Temperature Check LED Temp xxxC Head Temp xxxC Base Temp xxxC Envi Temp xxxC Motor Reset Please Wait...		
DMX Settings	DMX Address	001 - XXX	
	DMX Mode	Basic 24CH Standard 33CH Pixels 121CH	
	No DMX Status	Hold Last Fade to Black Sun Protection	
	Protocol	Select Signal	Art-Net / sACN
		Universe	1-****
		IP Address	2.x.x.x
		Subnet Mask	255.0.0.0
		Ethernet DMX Out	Off/On
		Network Switch	Off/On
Control	Manual Control	Dimmer 0% - 100% Tilt ...	
	Reset	All	
		Movement	
		Color	
		Zoom	
	Self Test	All	
		Dimmer	
		Movement	
		Color Mix	
		Zoom	
		Low	

Settings	Fan Mode	High	
		Auto	
	Tilt Mode	Tilt Invert	Off/On
		Tilt Speed	Smooth/Fast
		Tilt Feedback	Off/On
		Zoom Speed	Smooth/Fast
	Dimmer Curve	Linear	
		Square	
		Square Inverse	
		S-Curve	
	Dimmer Mode	Standard	
		Stage	
		TV	
		Architectural	
		Theatre	
	Dim to Warm	On / Off	
	Pixel Flip	On / Off	
	LED Refresh Rate	1200Hz, 3600Hz, 5000Hz, 10KHz,15KHz, 20KHz, 25KHz(Default = 1200Hz)	
	LED Power Limit	50%, 60%, 70%, 80%, 90%, 100%	
	Display	Screen Delay	10s - 5min (Default =1min)
		Screen Lock	Off/ON/ON1
		Auto Rotate	Off/On/Auto
	Reset Defaults	Yes / No	
	Time	Current Time	
		Total Run Time	
		Last Run Time	
		LED Time	
	Temperature	LED 1	
		LED 2	
		LED 3	
		LED 4	
		Head	
		Base	
	Humidity	Head Base	

www.ckclighting.com

Infor-mation	FAN	LedFan1 LedFan2 LedFan3 LedFan4 LedFan5 LedFan6 BaseFan1 BaseFan2
	DMX Values	Tilt...
	Product IDs	RDM UID
	Error Logs	Fixture Errors
	Software-Version	Vx.x
Service (Passcode 50)	Calibration	Dimmer
		Tilt
		...
	Reset Last Run	Yes / No
	Reset Error Logs	Yes / No
	CCT Record(Passcode 251)	
	Duv Calibration(Passcode 251)	
	Zoom Service(Zoom Maintenance mode)	

8. DMX channel table:

Head 1				
Basic	Standard	Pixels	Value Range	Function
1	1	1	0-255	Tilt
				Left → Right
	2	2	0-255	Tilt Fine
				Fine Position
2	3	3	0-255	Zoom
				Narrow → Wide
	4	4	0-255	Zoom Fine
				Fine Adjustment
Head 2				
Basic	Standard	Pixels	Value Range	Function
3	5	5	0-255	Tilt
				Left → Right
	6	6	0-255	Tilt Fine
				Fine Position
4	7	7	0-255	Zoom
	8	8	0-255	Zoom Fine
				Fine Adjustment
Main				
Basic	Standard	Pixels	Value Range	Function
5	9		0-255	Red
				0% - 100%
	10		0-255	Red Fine
				Fine Saturation
6	11		0-255	Green
				0 → 100%
	12		0-255	Green Fine
				Fine Saturation
7	13		0-255	Blue
				0 → 100%
	14		0-255	Blue Fine
				Fine Saturation
8	15		0-255	Lime
				0 → 100%
	16		0-255	Lime Fine
				Fine Saturation
9	17	9	0-255	Dimmer
				0 → 100%
10	18	10	0-255	Dimmer Fine
				Fine Adjustment
11	19	11		Strobe
			0-31	Closed
			32-63	Open
			64-95	Strobe Effect slow to fast
			96-127	Open
			128-159	Pulse Effect slow to fast
			160-191	Open
			192-223	Random Effect slow to fast
			224-255	Open
12	20	12		Variable CCT
			0-23	Open (6000K)
			24-85	2400K → 8500K
			86-255	8500K
				Color
			0	Open
			1-179	Virtual Swatch Book (See Sheet)

www.ckclighting.com

13	21	13		Scroll
			180-201	Clockwise Fast → Slow
			202-207	Stop
			208-229	Counter-clockwise Slow → Fast
			230-234	Open
				Random Slots
			235-239	Fast
			240-244	Medium
			245-249	Slow
			250-255	Open
14	22	14		Color FX Selection
			0-15	Off
			16-22	Auto Program 1
			23-29	Auto Program 2
			30-36	Auto Program 3
			37-43	Auto Program 4
			44-50	Auto Program 5
			51-57	Auto Program 6
			58-64	Auto Program 7
			65-71	Auto Program 8
			72-78	Auto Program 9
			79-85	Auto Program 10
			86-92	Auto Program 11
			93-99	Auto Program 12
			100-106	Auto Program 13
			107-113	Auto Program 14
			114-120	Auto Program 15
			121-127	Auto Program 16
			128-134	Auto Program 17
			135-141	Auto Program 18
			142-148	Auto Program 19
			149-155	Auto Program 20
			156-162	Auto Program 21
			163-169	Auto Program 22
			170-176	Auto Program 23
			177-183	Random Program
			184-255	No Function
15	23	15		Color FX Speed
			0-255	Slow → Fast
16	24	16		Color FX Fade
			0-255	Slow → Fast

17	25	17		Sparx FX Selection
			0-15	Off
			16~20	Auto Program 1
			21~25	Auto Program 2
			26~30	Auto Program 3
			31~35	Auto Program 4
			36~40	Auto Program 5
			41~45	Auto Program 6
			46~50	Auto Program 7
			51~55	Auto Program 8
			56~60	Auto Program 9
			61~65	Auto Program 10
			66~70	Auto Program 11
			71~75	Auto Program 12
			76~80	Auto Program 13
			81~85	Random Program
			86~255	No Function
18	26	18		Sparx FX Speed
			0-255	Slow → Fast
19	27	19		Sparx FX Fade
			0-255	Slow → Fast
20	28	20		Dimmer Modes
			0-20	Standard
			21-40	Stage
			41-60	TV
			61-80	Architectural
			81-100	Theatre
			101-255	Idle
	29	21		Tilt Speed
			0-255	Max → Min Speed
			Control (Trigger control channel; must set shutter to 0-31 for it to take effect, except for reset function, DTW switch, and sunlight protection mode)	
			0-50	Idle
				Fan Mode
			51-60	Low
			61-70	High
			71-80	Auto
				Dimmer Curves
			81-90	Linear

www.ckclighting.com

21	30	22	91-100	Square(Default)
			101-110	Inverse Square
			111-120	S-Curve
				Refresh Rate (Hz)
			121-125	Led Freq. 1200 Hz (hold 3s)
			126-130	Led Freq. 3600 Hz (hold 3s)
			131-135	Led Freq. 5000 Hz (hold 3s)
			136-140	Led Freq. 10.000 Hz (hold 3s)
			141-145	Led Freq. 15.000 Hz (hold 3s)
			146-150	Led Freq. 20.000 Hz (hold 3s)
			151-155	Led Freq. 25.000 Hz (hold 3s)
				Reset
			156-160	Tilt
			161-165	Zoom
			166-170	All
				Pixel Flip
			171-175	Default Pixel order
			176-180	Flip Pixel Order
				Dim to Warm
			181-185	DTW On
			186-190	DTW Off
				Sun Protection
			191-195	Sun Protection ON
			196-200	Sun Protection OFF
			201-255	No function

RGBL Pixels

Basic	Standard	Pixels	Value Range	Function
		23	0-255	Red 1
				0 → 100%
		24	0-255	Green 1
				0 → 100%
		25	0-255	Blue 1
				0 → 100%
		26	0-255	Lime 1
				0 → 100%
		27	0-255	Red 2
				0 → 100%
		28	0-255	Green 2
				0 → 100%
		29	0-255	Blue 2
				0 → 100%
		30	0-255	Lime 2
				0 → 100%
		31	0-255	Red 3
				0 → 100%
		32	0-255	Green 3
				0 → 100%
		33	0-255	Blue 3
				0 → 100%
		34	0-255	Lime 3
				0 → 100%
		35	0-255	Red 4
				0 → 100%
		36	0-255	Green 4
				0 → 100%
		37	0-255	Blue 4
				0 → 100%
		38	0-255	Lime 4
				0 → 100%
		39	0-255	Red 5
				0 → 100%
		40	0-255	Green 5
				0 → 100%
		41	0-255	Blue 5
				0 → 100%
		42	0-255	Lime 5
				0 → 100%
		43	0-255	Red 6
				0 → 100%
		44	0-255	Green 6
				0 → 100%
		45	0-255	Blue 6
				0 → 100%
		46	0-255	Lime 6
				0 → 100%
		47	0-255	Red 7
				0 → 100%
		48	0-255	Green 7
				0 → 100%

www.ckclighting.com

		49	0-255	Blue 7
				0 → 100%
		50	0-255	Lime 7
				0 → 100%
		51	0-255	Red 8
				0 → 100%
		52	0-255	Green 8
				0 → 100%
		53	0-255	Blue 8
				0 → 100%
		54	0-255	Lime 8
				0 → 100%
		55	0-255	Red 9
				0 → 100%
		56	0-255	Green 9
				0 → 100%
		57	0-255	Blue 9
				0 → 100%
		58	0-255	Lime 9
				0 → 100%
		59	0-255	Red 10
				0 → 100%
		60	0-255	Green 10
				0 → 100%
		61	0-255	Blue 10
				0 → 100%
		62	0-255	Lime 10
				0 → 100%
		63	0-255	Red 11
				0 → 100%
		64	0-255	Green 11
				0 → 100%
		65	0-255	Blue 11
				0 → 100%
		66	0-255	Lime 11
				0 → 100%
		67	0-255	Red 12
				0 → 100%
		68	0-255	Green 12
				0 → 100%

		69	0-255	Blue 12
				0 → 100%
		70	0-255	Lime 12
				0 → 100%
		71	0-255	Red 13
				0 → 100%
		72	0-255	Green 13
				0 → 100%
		73	0-255	Blue 13
				0 → 100%
		74	0-255	Lime 13
				0 → 100%
		75	0-255	Red 14
				0 → 100%
		76	0-255	Green 14
				0 → 100%
		77	0-255	Blue 14
				0 → 100%
		78	0-255	Lime 14
				0 → 100%
		79	0-255	Red 15
				0 → 100%
		80	0-255	Green 15
				0 → 100%
		81	0-255	Blue 15
				0 → 100%
		82	0-255	Lime 15
				0 → 100%
		83	0-255	Red 16
				0 → 100%
		84	0-255	Green 16
				0 → 100%
		85	0-255	Blue 16
				0 → 100%
		86	0-255	Lime 16
				0 → 100%
Sparx Pixels				
Basic	Standard	Pixels	Value Range	Function

www.ckclighting.com

22	31	87	0-255	Dimmer
				0 → 100%
23	32	88	0-255	Dimmer Fine
				Fine Adjustment
24	33	89		Strobe
			0-31	Closed
			32-63	Open
			64-95	Strobe Effect slow to fast
			96-127	Open
			128-159	Pulse Effect slow to fast
			160-191	Open
			192-223	Random Effect slow to fast
			224-255	Open
		90	0-255	Dimmer 1
				0 → 100%
		91	0-255	Dimmer 2
				0 → 100%
		92	0-255	Dimmer 3
				0 → 100%
		93	0-255	Dimmer 4
				0 → 100%
				Dimmer.....
		121	0-255	Dimmer 32
				0 → 100%

Light pixel diagram (Facing the display screen)

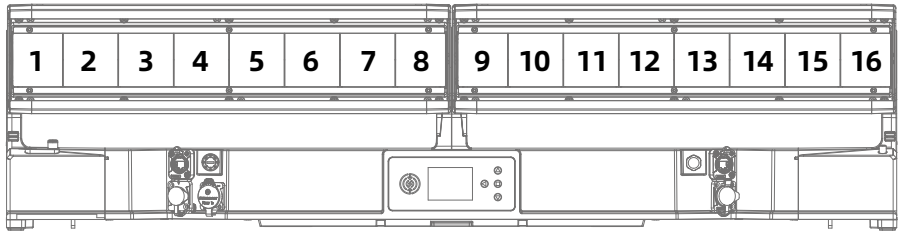

Virtual Swatch Colors

Value	Filter Number	Name	Value	Filter Number	Name
1	7	pale yellow	32	49	medium purple
2	103	straw	33	58	lavender
3	151	gold tint	34	199	palace blue
4	100	spring yellow	35	119	dark blue
5	10	medium yellow	36	132	medium blue
6	101	yellow	37	120	deep blue
7	104	deep amber	38	165	daylight blue
8	15	deep straw	39	161	slate blue
9	179	loving amber	40	118	light blue
10	21	gold amber	41	68	sky blue
11	105	orange	42	143	pale navy blue
12	158	deep orange	43	131	marine blue
13	22	dark amber	44	115	peacock blue
14	778	millenium gold	45	172	lagoon blue
15	135	deep golden amber	46	116	medium blue green
16	24	scarlet	47	90	dark yellow green
17	106	primary red	48	139	primary green
18	26	bright red	49	122	fern green
19	27	medium red	50	89	moss green
20	19	fire	51	124	dark green
21	157	pink	52	88	lime green
22	36	medium pink	53	138	pale green
23	111	dark pink	54	203	Quarter CT Blue
24	128	bright pink	55	202	Half CT Blue
25	148	bright rose	56	201	FULL CT Blue
26	332	special rose pink	57	200	double CT Blue
27	793	vanity fair	58	206	Quarter CT Orange
28	113	magenta	59	205	Half CT Orange
29	46	dark magenta	60	204	FULL CT Orange
30	48	rose purple	61-179		No function
31	126	mauve			

www.ckclighting.com

9. Control circuit diagram

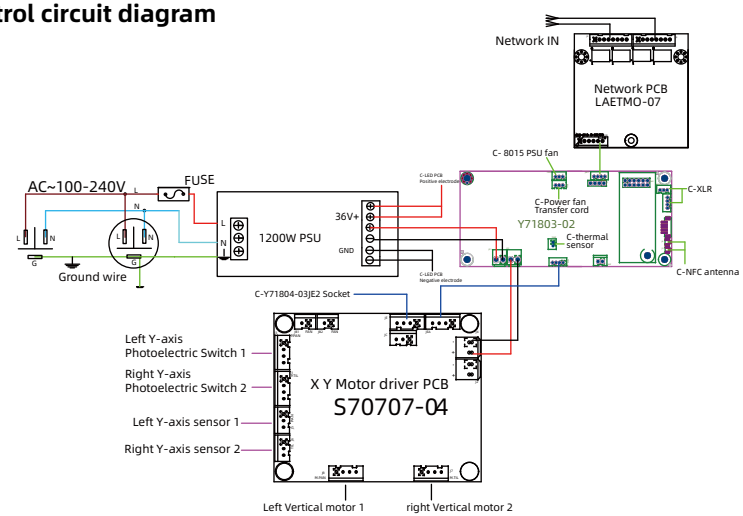

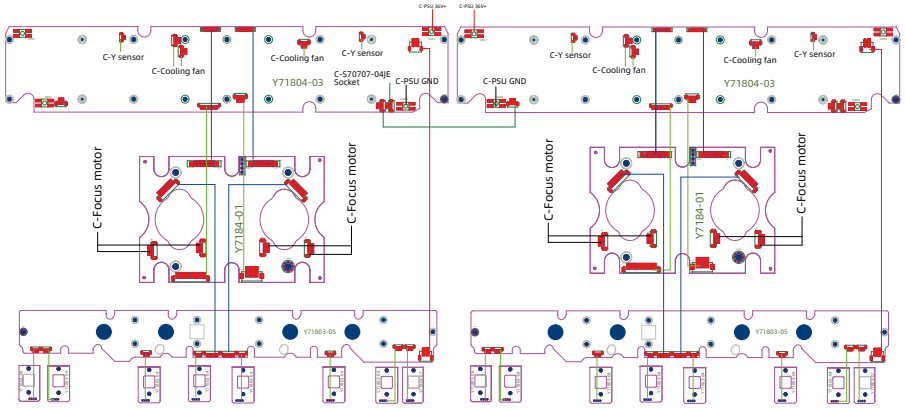

10. Regular maintenance

10.1 Cleaning and maintenance

Lighting fixtures require daily cleaning and maintenance, and their service life largely depends on the operating environment and standards. If you have any questions, please consult our technical engineers for advice. Maintenance and repair work not included in this book should be entrusted to our qualified technical engineers.

Attention! Damage caused by dust, e-liquid, or other reasons, as well as abnormal use, is not covered by the warranty.

Waining !

Before opening any lid, disconnect the power supply. Cleaning optical components requires gentle wiping as the coating surface is prone to scratching. Do not use damaging liquids or hard objects , as they may damage the plastic or coating surface.

- When the lens is cracked or otherwise damaged, it should be replaced in a timely manner;
- When the brightness significantly decreases, the LED may have reached its expiration date and should be replaced in a timely manner;
- When the fixture cannot start, please check if the fixture power fuse is blown. If it is blown, a fuse of the same specification must be used for installation;
- The fixture is equipped with a temperature protection device. When the temperature is too high, the protection device will automatically reduce power.
- When this situation occurs, please check whether the fan is running normally, whether the fan and fan mesh are clogged with dust, identify the fault and repair it before starting the fixture. Please note that only qualified technicians are allowed to carry out maintenance work;
- To maintain smooth movement of the focusing lens, it is recommended to lubricate the guide rail of the focusing lens every three months. Excellent and high-temperature resistant lubricating grease should be used, and excessive grease should not be used as it can easily dirty adjacent components.

10.2 Fault analysis and handling

Fault description	Analysis	Processing method
No action after power on	Check if the power switch is turned on	Turn on
	Check if the fuse is blown	Replace
	Check if the output of PSU is normal	Detecting voltage
	Check if poor contact in the internal circuit	Reconnect
Uncontrolled lighting fixtures	Check if the DMX signal cable is connected correctly (If there is no signal, the display screen will flash)	Reconnect or replace
	Check if the address code is correct and if the DMX mode of the lighting fixture matches the settings	Reconfirm
	The main control PCB is damaged	Replace

www.ckclighting.com

Not bright	LED aging or damage	Replace
	Power PCB malfunction	Check/ Replace
	Loose or poor contact of the circuit	Reconnect
	PSU malfunction	Replace
Automatically turn off or dim the lights	LED aging	Replace
	Damaged cooling fan or abnormal wind speed	Replace
	Check the power output of the fan	Check/ Replace
	The temperature control switch is damaged	Replace
Weak light efficiency and uneven light spot	LED aging	Replace
	LED not centered with the lens	Adjust LED
	The optical mirror has accumulated dust or stains	Clean
	The optical mirror is damaged	Replace
Impure color	Weakening of light efficiency	Replace led PCB
Head or base fan stops rotating	Check if the fan leads are installed properly or disconnected	Re connect
	Check if the fan is damaged	Replace
	Check if there are any other interfering objects within the operating range of the fan	Adjust
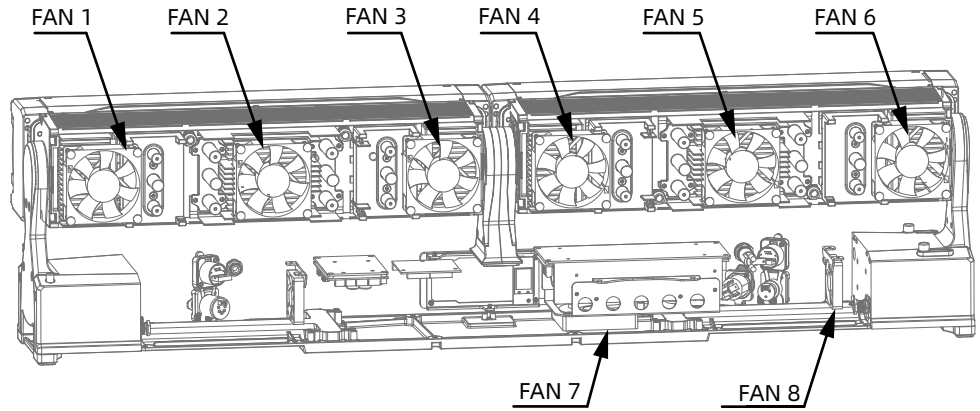
Attention! The above analysis is for abnormal reference only. Non professionals are not allowed to disassemble and repair the machine