ZB Par 12S

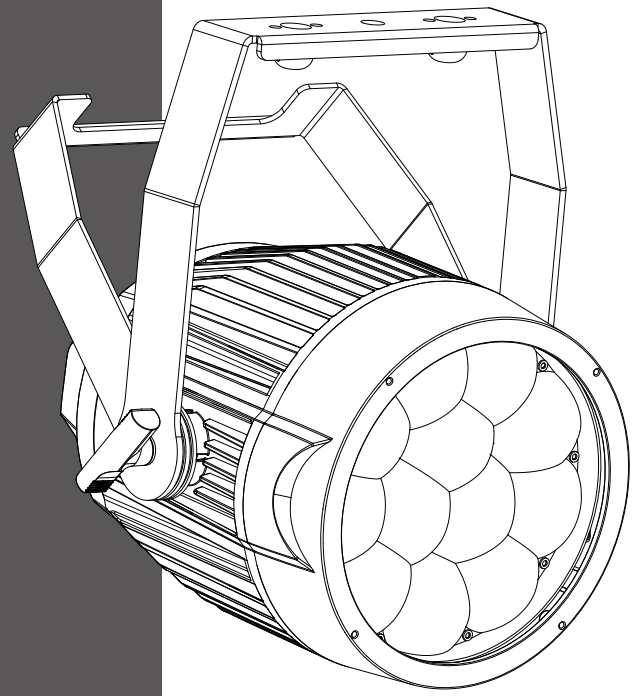

www.ckclighting.com

Before carrying out any installation, maintenance, or cleaning of the lighting fixtures, please confirm that the power has been cut off! Before using this fixture, please read this manual. Our company reserves the right to change product design and specifications without prior notice.

CKC LIGHTING CO.,LTD

Addr.:335 Nansha Avenue, Tung Chung Town,
Nansha District, Guangzhou City, China.
TEL：(020)3920 4506 FAX：(020)3920 4631
WEB：www.ckclighting.com

CONTENTS

1. Security Warning Information 1

2. Product Introduction 3

2.1 Exterior dimensions 3
2.2 Fixture packaging accessories 3

3. Main technical parameters of the equipment 3

4. Packaging and transportation 4

4.1 Disassemble packaging 4
4.2 Equipment installation 4

5. Installation Requirements Explanation 5

5.1 Clamp installation 5
5.2 Fixture installtion 6
5.3 Hanging Installation Diagram 6

6. Power and signal connection 6

6.1 Power and signal socket 6
6.2 Power Connect 7
6.3 Signal Connect 7

7. Control panel 8

7.1 Panel Introduction 8
7.2 System menu 8

8. DMX control channel table 10

9. Control circuit diagram 14

10. Regular maintenance 14

10.1 Cleaning and maintenance 14
10.2 Fault analysis and handling 15

www.ckclighting.com

★ Statement ★

- This manual contains important information on safe use and installation. Please read it carefully and follow the requirements for operation and installation. Please keep this manual properly;
- The equipment has good performance and complete packaging when it leaves the factory. The operator should strictly follow the warning items and operating instructions stated in the manual. Any malfunction or damage caused by misuse or neglect of the manual is not within the scope of our company's responsibility and warranty;
- The relevant information in this manual is for reference only. All lighting products are subject to the actual product. Any changes will not be notified separately, and our company reserves the right of final interpretation.

1. Security Warning Information

Attention !

Please read the safety requirements information in this section carefully before installing, powering on, operating, or repairing the lighting fixtures.

- This product is for professional use and is not suitable for other purposes;
- After receiving the lighting fixtures, please check if the packaging is complete and unpack to check if the equipment has been damaged due to transportation. If there is any damage caused by transportation, please do not use this lamp and contact local technicians or manufacturers as soon as possible;
- When transporting again, please use the original packaging materials;
- If there is obvious damage to the machine casing, it should be replaced in a timely manner;
- When hanging lamps, it is necessary to verify that the hanging equipment can withstand more than 6 times the weight of the lamp. After installation, it is necessary to verify that the lamp cover and installation buckle are secure and undamaged. At the same time, a safety rope should be used as an auxiliary safety for the lamp and fixed on the truss;
- The light source inside this luminaire should be replaced by the manufacturer, its service agent, or a similarly qualified person;
- If you have any other questions about how to safely operate the equipment, please contact our technical personnel or call our service hotline;
- This product has a protection level of IP65 and can be used both indoors and outdoors;

- Lighting fixtures should be kept clean and avoid prolonged use in overheated or dusty environments to prevent contact with chemical liquids;
- When using the product, attention should be paid to avoiding serious or fatal injuries caused by fire, heat, electrical shock, and ultraviolet radiation. Before powering on or installing, read the instruction manual first. Follow the safety precautions for operation and pay attention to the warning signs on the instructions and equipment;
- Only professionals are allowed to install, operate, and maintain lighting fixtures, and strictly follow the procedures stated in the operating instructions.

- The eyes cannot directly look at the luminous object;
- Do not connect this device to any dimmer;
- If visible damage occurs to the protective casing, lens, and display screen on the lighting fixture, it is considered as damage to the point of loss;
- Please do not place any filters or other items at the light outlet, and do not replace non original parts;
- The minimum safe illumination distance of the lamp is 1m.

- Before installation, please confirm that the power supply voltage used matches the voltage indicated on the light fixture. Each lighting fixture should be properly grounded and electrically installed according to relevant standards;
- Please disconnect the power before repairing or cleaning the equipment;
- During the operation of the lighting fixtures, touching the wires is prohibited to prevent electric shock;
- If the external soft cable or wire of this lamp is damaged, the wire should be replaced by the manufacturer, its agent, or a similarly qualified person to avoid danger;
- Avoid flammable liquids, water, or metal conductors from entering the interior of the lamp to prevent electric shock or fire. If any foreign objects enter the lamp, immediately cut off the power supply;
- When multiple lamps are operated in series, the signal lines can be connected in multiple ways, but the power supply must be connected separately.

- The lighting fixtures work normally at -40 ℃ to 45 ℃ . When replacing any components or accessories in the equipment, ensure that the power is disconnected to prevent electric shock and injury;
- The maximum surface temperature of the lamp during operation can reach 72 ℃ , please do not touch it with bare hands.

- The lighting fixtures must be installed in a sufficiently ventilated area, at least 0.5m away from adjacent surfaces, to ensure that no ventilation holes are blocked;
- Do not install the lighting fixtures directly on flammable objects;
- The minimum distance between all outer surfaces of the lamp and combustible materials is 0.5m.

www.ckclighting.com

2. Product Introduction

2.1 Exterior dimensions of lighting fixtures

316 × 222 × 367 mm

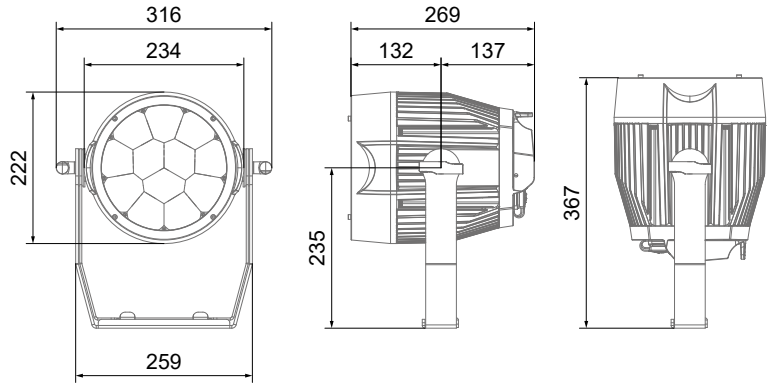

2.2 Packaging accessories

Name	QTY
Clamp	1 PCS
Safety cable	1 PCS

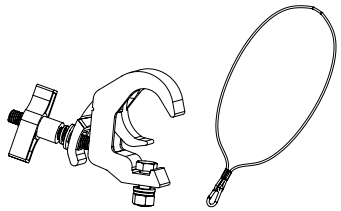

3. Main technical parameters of the equipment

Product execution standards：GB43472-2023、GB/T7000.1-2023、GB/T7000.217-2023

● Electrical parameter

Rated input voltage：AC 100V-240V~ 50Hz/60Hz
Power：248W@220V；252W@100V
Power factor：0.99@220V
Input Current：1.07A 220V

● Source lifespan

> 20000 hours

● Optical system

Source：12 × 20W RGBL LED
Beam angel：5 ~ 30°
Field angle：8 ~ 50°
CCT：2700 ~ 7000 K
CRI：71

● Control and programming

Control channel：6CH/9CH/10CH/12CH/15CH/18CH
Protocol：DMX512, RDM
Data connect：3 pin or 5pin signal in/out

● Illumination draw

Lux	35600	13500	5230
Diameter (m)	0.26	0.44	0.70

Lux	1850	710	312
Diameter (m)	2.80	4.66	7.46

● Other effect function

Fast electronic strobe：1~25Hz

● Other features and functions

Weight：7.8 KG

4. Packaging and transportation

4.1 Disassemble packaging

Notice：After receiving the fixture, please unpack and check for any damage caused by transportation. If there is any damage caused by transportation, please do not use this fixture and contact the local technical personnel or manufacturer as soon as possible.

4.2 Equipment packaging

1). Disconnect the power supply before packaging the lighting fixtures to allow them to cool completely;
2). Flight cases can only be stacked in two layers and are not allowed to be reversed.

www.ckclighting.com

5. Installation Requirements Explanation

5.1 Clamp install

The lighting fixtures can be installed on the stage or on any direction of the truss, and the clamp can be quickly and easily locked onto the truss.

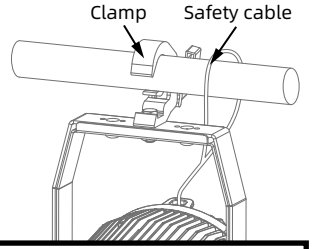

Waining !

Fixture can be used to fix the equipment, and a safety rope must be connected to the safety hook. Note that it cannot be connected to the handle.

Quick lock and clamp install

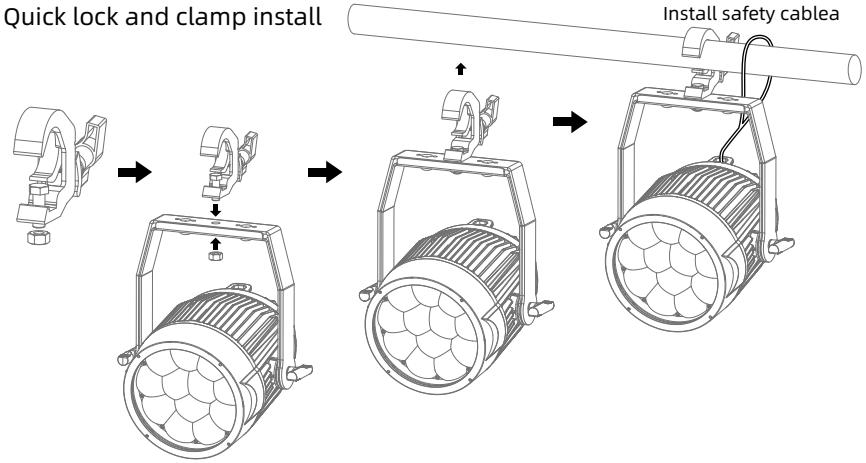

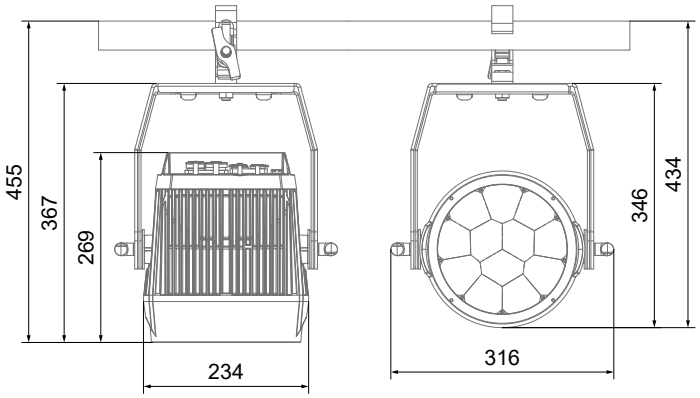

5.2 Equipment installation

1). Before installation, it is necessary to verify that the lamp hook and safety rope are not damaged, and that the installation object can withstand 6 times the total weight of the lamp and cable accessories;

2). Install the lamp hook on the handle and insert it horizontally into the handle mounting hole to lock it in place.

5.3 Hanging Installation Diagram

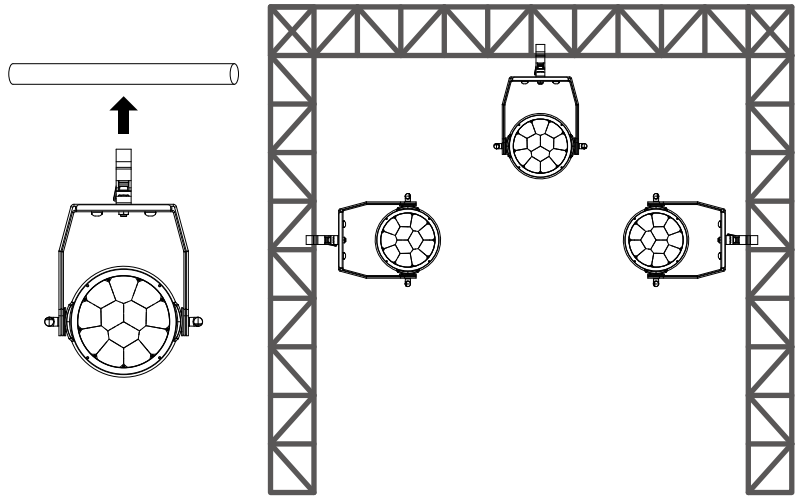

6. Power、Signal connect

6.1 Power and signal socket

1. Power input
2. Power output
3. DMX output
4. Dmx input
5. Breathable valve

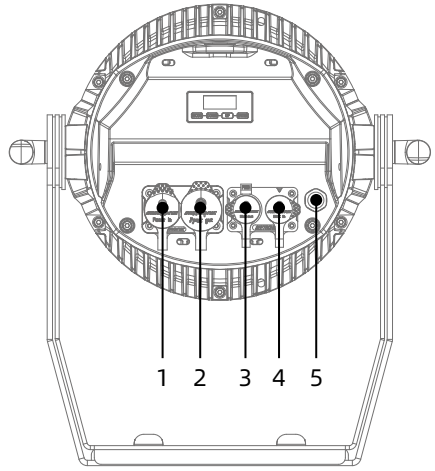

6.2 Power connect

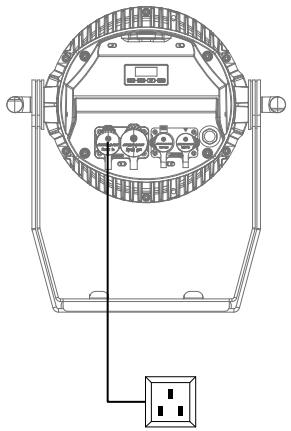

Connection method:

L(live wire) - brown wire

E(Ground wire) - yellow/green dual color line

N(Zero Line) - Blue Line

When connecting the power supply, please note that the voltage and frequency of the power supply must match the voltage and frequency marked on the light fixture. When multiple fixtures are used simultaneously, it is recommended to connect the power supply of each fixture separately, so that each fixture can be individually controlled for power on/off.

Attention: When connecting the power supply, the ground wire (yellow/green dual color wire) must be safely grounded and comply with all relevant electrical installation standards.

Power In

This product uses Powercon In/Out to connect power cords. Due to power limitations, a 2 square meter power cord can carry up to 14 products at 240V and 5 product at 100V.

Waining !

- Do not connect too many fixtures or overload a single power cord;
- Do not use power cords with damaged insulation layers, and do not place power cords on other wires;
- When the fixture is not in use or cleaned, please unplug the power cord; Do not forcefully unplug or drag the power cord directly.

6.3 Signal connect

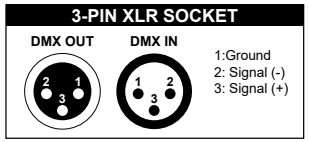

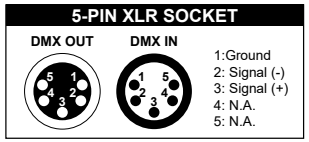

The lighting fixtures are equipped with standard DMX XLR input and output sockets. Please use DMX512 shielded twisted pair signal cables or Category 3/5 or above network twisted pair cables for connection. The typical connection distance for DMX signal lines is 150 meters. When transmitting signals over long distances, a DMX512 signal amplifier must be added.

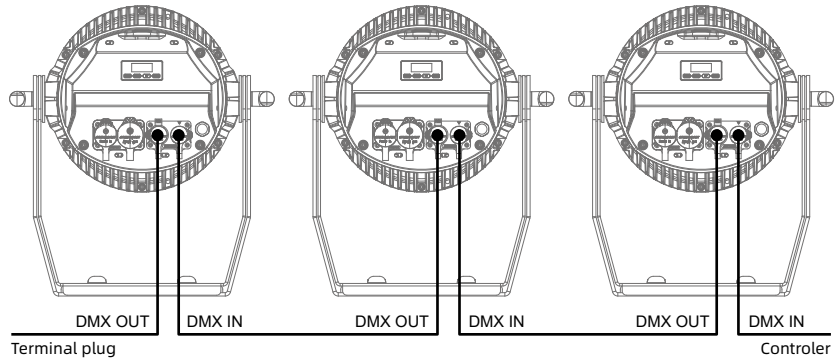

Connect a shielded twisted pair signal cable from the DMX output port of the controller to the DMX input port of the first device, and from the DMX output port of the first device to the DMX input port of the second device, and so on, until all the lamps are connected. Then install a terminal plug on the last 3 pin socket of each connected lamp output. (Weld a 4/1W, 120 Ω resistor between the 2 and 3 pins of a 3 or 5 core pin XLR plug).

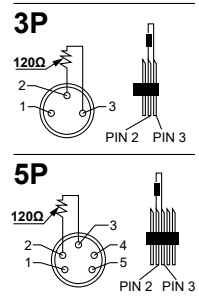

7. Control panel

7.1 Panel Introduction

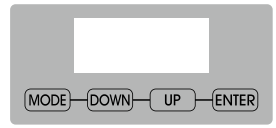

- Adopting OLED screen display;
- Press the MODE key to view or modify the lighting function settings, and press the UP, DOWN, LEFT, and RIGHT keys to select the function menu;
- Press the ENTER key to confirm your selected function menu, which will take you to the corresponding sub menu in the menu. Each menu item represents a specific function of the lighting fixture (as shown in the table below);
- Press the ENTER key to save your modifications or enter a submenu, and press the UP or DOWN key to modify values (increase or decrease values); Press the MODE key to return to the previous menu or exit.
- Press the MODE key to return to the previous menu or exit.

7.2、System menu

Note: The gray color block is the default setting value

Software Update Please Wait... Motor Reset.... ZB Par 12S CKC V1.XX		
DMX Set	Address	001~512
	Ch.Mode	6CH/9CH/10CH/12CH/15CH/18CH
	NO DMX	Hold/Blackout/Manual/ Int.Pro

www.ckclighting.com

Personality	Master/Slave	Master / Slave		
	Zoom Mode	Mode1/Mode2		
	Zoom Reset	Yes/no		
	Dim Mode	Standard Stage TV Architec Theatre Stage 2 DimSpeed 0.1s . . 10.0s		
	Dim Curve	Square Linear Inv.Squa S-Curve		
	LED Refresh	900/1000/1100/1200/1300/1400/1500/2500/ 4000/5000/10k/15k/20k/25kHz		
	Display	SaveDlay	1~10	
		Lock	OFF, 30S,1M, 2M,..., 10M	
	Service	Password:50	calibrat	Red: 000-255 Greed:000-255 Blue: 000-255 Lime: 000-255 Zoom:000-255 Default: 127
			Restore Passwor:11	YES/NO
Manual	Red Green Blue Lime ClrMacro ClrTemp ClrTeMac Shutter MarstDim ZoomLine ZoomPres AutoProg ProgSpd ProgFade	000-255 000-255 000-255 000-255 000-255 000-255 000-255 000-255 000-255 000-255 000-255 000-255 000-255 000-255		
IntProgs	Prog 01	Speed:000-255		
		Fade: 000-255		
	Prog 02	Speed:000-255		
		Fade: 000-255		
	...			
	Prog 7	Speed:000-255		
		Fade: 000-255		
Info.	Hours	PwrOnHr1	xxxxH	
		PwrOnHr2	xxxxH	
		PwrOnRst	Password:50	
	Temp	Temp	xxx℃ xxx °F	
		Maxtemp1	xxx℃ xxx °F	
		Maxtemp2	xxx℃ xxx °F	
		TempRst	Password:50	
	FanInfo.	FanRPM	xxx	
	DMX Valu	R:000-255		
		G:000-255		
		B:000-255		
		L:000-255		
		...		
	Software	1U V1.01		

8. DMX channel table:

6Ch	9Ch	10Ch	12CH	15Ch	18Ch	Value	Function
1	1	1	1	1	1	0-255	**Red**
							0~100%
		2					**Red Fine 16-bit**
2	2	3	2	2	2	0-255	**Green**
							0~100%
		4					**Green Fine 16-bit**
3	3	5	3	3	3	0-255	**Blue**
							0~100%
		6					**Blue Fine 16-bit**
4	4	7	4	4	4	0-255	**Lime**
							0~100%
		8					**Lime Fine 16-bit**
			5	5	5		**Color Macros**
			6	6	6	0-255	**Color Temperature 2700-7000K Linear**
							0~100%
			7	7	7		**Color Temperature Macros**
						0	Off
						001-054	2700k
						055-109	3200k
						110-164	4000k
						165-219	5600k
						220-255	6500k
							Shutter, Strobe
						0-31	Led's Off

www.ckclighting.com

	5		8	8	8	32-63	Led's On
						64-95	Strobe effect slow to fast
						96-127	Led's On
						128-159	Pulse-effect in sequences
						160-191	Led's On
						192-223	Random strobe effect slow to fast
						224-255	Led's On
	6		9	9	9	0-255	**Dimmer (Intensity)**
							Intensity 0 to 100%
	7		10	10	10	0-255	**Dimmer Fine 16-bit**
5	8	9	11	11	11	0-255	**Zoom Linear:**
							Zoom from min. to max. beam angle
6	9	10	12	12	12		**Zoom Presets**
						0-20	Normal (5°)
						21-40	Very Narrow Spot (6°)
						41-60	Narrow (10°)
						61-80	Medium Flood (30°)
						81-100	Wide Flood (40°)
						101-255	Very Wide Flood (50°)
					13		**Auto programs**
						0-31	Off
						32-63	Auto Program 1
						64-95	Auto Program 2 (Fade)
						96-127	Auto Program 3
						128-159	Auto Program 4 (Fade)
						160-191	Auto Program 5
						192-223	Auto Program 6 (Fade)
						224-255	Auto Program 7
					14	0-255	**Auto Programs Speed**
							Slow to Fast speed
					15	0-255	**Auto Programs Fade**
							Min. to Max.
				13	16		**Dim Mode**
						0-20	Default to Unit Setting
						21-40	Standard
						41-60	Stage
						61-80	TV
						81-100	Architectural
						101-120	Theatre
						121-140	Stage 2
						141-160	Dim Speed from Fast to Slow (0.1-10s)
						161-255	Default to Unit Setting
				14	17		**Dim Curves** (Hold 3s)
						0-20	Square
						21-40	Linear
						41-60	Inv. Squa
						61-80	S. Curve
						81-255	No Function
				15	18		**Refresh Rates** (Hold 3s)
						0-15	Default to Unit Setting
						16-30	900HZ
						31-45	1000HZ
						46-60	1100HZ
						61-75	1200HZ
						76-90	1300HZ
						91-105	1400HZ
						106-120	1500HZ
						121-135	2500HZ
						136-150	4000HZ
						151-165	5000HZ
						166-180	10000HZ
						181-195	15000HZ
						196-210	20000HZ
						211-225	25000HZ
						226-229	Enable Zoom Mode 1 (Hold 3s)
						230-233	Enable Zoom Mode 2 (Hold 3s)
						234-238	Zoom Reset
						239-255	No Function

Static colors sheet

	DMX VALUES	R	G	B	L
	0	OFF			
Color Macro 1	1-4	80	255	234	80
Color Macro 2	5-8	80	255	164	80
Color Macro 3	9-12	77	255	112	77
Color Macro 4	13-16	117	255	83	83
Color Macro 5	17-20	160	255	77	77
Color Macro 6	21-24	223	255	83	83
Color Macro 7	25-28	255	243	77	77
Color Macro 8	29-32	255	200	74	74
Color Macro 9	33-36	255	166	77	77
Color Macro 10	37-40	255	125	74	74
Color Macro 11	41-44	255	97	77	74
Color Macro 12	45-48	255	71	77	71
Color Macro 13	49-52	255	83	134	83
Color Macro 14	53-56	255	93	182	93
Color Macro 15	57-60	255	96	236	96
Color Macro 16	61-64	238	93	255	93
Color Macro 17	65-68	196	87	255	87

www.ckclighting.com

Color Macro 18	69-72	150	90	255	90
Color Macro 19	73-76	100	77	255	77
Color Macro 20	77-80	77	100	255	77
Color Macro 21	81-84	67	148	255	67
Color Macro 22	85-88	77	195	255	77
Color Macro 23	89-92	77	234	255	77
Color Macro 24	93-96	158	255	144	144
Color Macro 25	97-100	255	251	153	153
Color Macro 26	101-104	255	175	147	147
Color Macro 27	105-108	255	138	186	138
Color Macro 28	109-112	255	147	251	147
Color Macro 29	113-116	151	138	255	138
Color Macro 30	117-120	99	0	255	100
Color Macro 31	121-124	138	169	255	138
Color Macro 32	125-128	255	255	255	255
Color Macro 33	129-132	255	206	143	0
Color Macro 34	133-136	254	177	153	0
Color Macro 35	137-140	254	192	138	0
Color Macro 36	141-144	254	165	98	0
Color Macro 37	145-148	254	121	0	0
Color Macro 38	149-152	176	17	0	0
Color Macro 39	153-156	96	0	11	0
Color Macro 40	157-160	234	139	171	0
Color Macro 41	161-164	224	5	97	0
Color Macro 42	165-168	175	77	173	0
Color Macro 43	169-172	119	130	199	0
Color Macro 44	173-176	147	164	212	0
Color Macro 45	177-180	88	2	163	0
Color Macro 46	181-184	0	38	86	0
Color Macro 47	185-188	0	142	208	0
Color Macro 48	189-192	52	148	209	0
Color Macro 49	193-196	1	134	201	0
Color Macro 50	197-200	0	145	212	0
Color Macro 51	201-204	0	121	192	0
Color Macro 52	205-208	0	129	184	0
Color Macro 53	209-212	0	83	115	0
Color Macro 54	213-216	0	97	166	0
Color Macro 55	217-220	1	100	167	0
Color Macro 56	221-224	0	40	86	0
Color Macro 57	225-228	209	219	182	0
Color Macro 58	229-232	42	165	85	0
Color Macro 59	233-236	0	46	35	0
Color Macro 60	237-240	8	107	222	0
Color Macro 61	241-244	255	0	0	0
Color Macro 62	245-248	0	255	0	0
Color Macro 63	249-252	0	0	255	0
Color Macro 64	253-255	0	0	0	255

9. Control circuit diagram

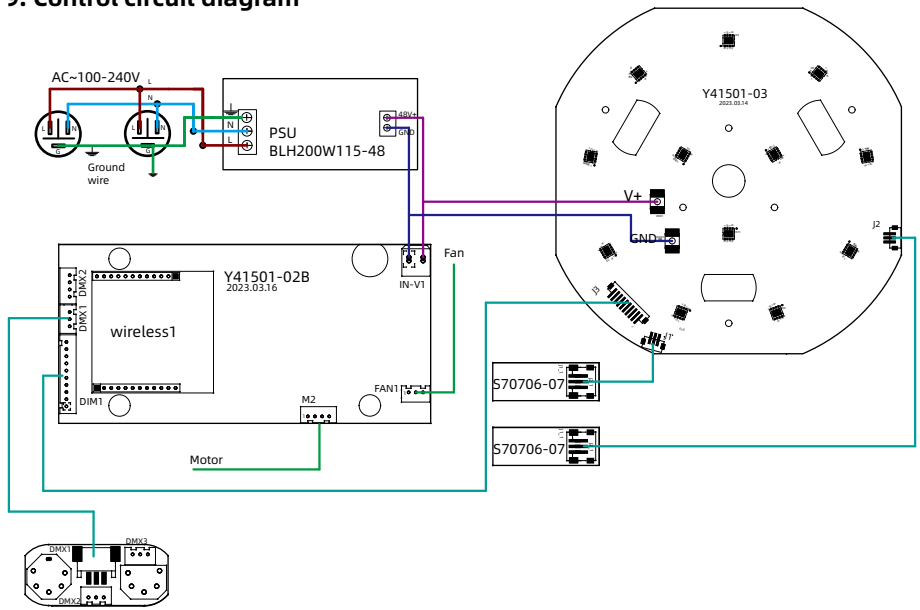

10. Regular maintenance

10.1 Cleaning and maintenance

Lighting fixtures require daily cleaning and maintenance, and their service life largely depends on the operating environment and standards. If you have any questions, please consult our technical engineers for advice. Maintenance and repair work not included in this book should be entrusted to our qualified technical engineers.

Attention! Damage caused by dust, e-liquid, or other reasons, as well as abnormal use, is not covered by the warranty.

Waining !

Before opening any lid, disconnect the power supply. Cleaning optical components requires gentle wiping as the coating surface is prone to scratching. Do not use damaging liquids or hard objects , as they may damage the plastic or coating surface.

- When the lens is cracked or otherwise damaged, it should be replaced in a timely manner;
- When the brightness significantly decreases, the LED may have reached its expiration date and should be replaced in a timely manner;
- When the fixture cannot start, please check if the fixture power fuse is blown. If it is blown, a fuse of the same specification must be used for installation;

www.ckclighting.com

● The fixture is equipped with a temperature protection device. When the temperature is too high, the protection device will automatically reduce power.

● When this situation occurs, please check whether the fan is running normally, whether the fan and fan mesh are clogged with dust, identify the fault and repair it before starting the fixture. Please note that only qualified technicians are allowed to carry out maintenance work;

● To maintain smooth movement of the focusing lens, it is recommended to lubricate the guide rail of the focusing lens every three months. Excellent and high-temperature resistant lubricating grease should be used, and excessive grease should not be used as it can easily dirty adjacent components.

10.2 Fault analysis and handling

Fault description	Analysis	Processing method
No action after power on	Check if the power switch is turned on	Turn on
	Check if the fuse is blown	Replace
	Check if the output of PSU is normal	Detecting voltage
	Check if poor contact in the internal circuit	Reconnect
Uncontrolled lighting fixtures	Check if the DMX signal cable is connected correctly (If there is no signal, the display screen will flash)	Reconnect or replace
	Check if the address code is correct and if the DMX mode of the lighting fixture matches the settings	Reconfirm
	The main control PCB is damaged	Replace
Not bright	LED aging or damage	Replace
	Power PCB malfunction	Check/ Replace
	Loose or poor contact of the circuit	Reconnect
	PSU malfunction	Replace
Automatically turn off or dim the lights	LED aging	Replace
	The temperature control switch is damaged	Replace
Weak light efficiency and uneven light spot	LED aging	Replace
	The optical mirror has accumulated dust or stains	Clean
	The optical mirror is damaged	Replace
Impure color	Weakening of light efficiency	Replace led PCB
	The color filter has accumulated dust or stains	Clean
	The color filter has been demolded or damaged	Replace

Attention! The above analysis is for abnormal reference only. Non professionals are not allowed to disassemble and repair the machine