VH20

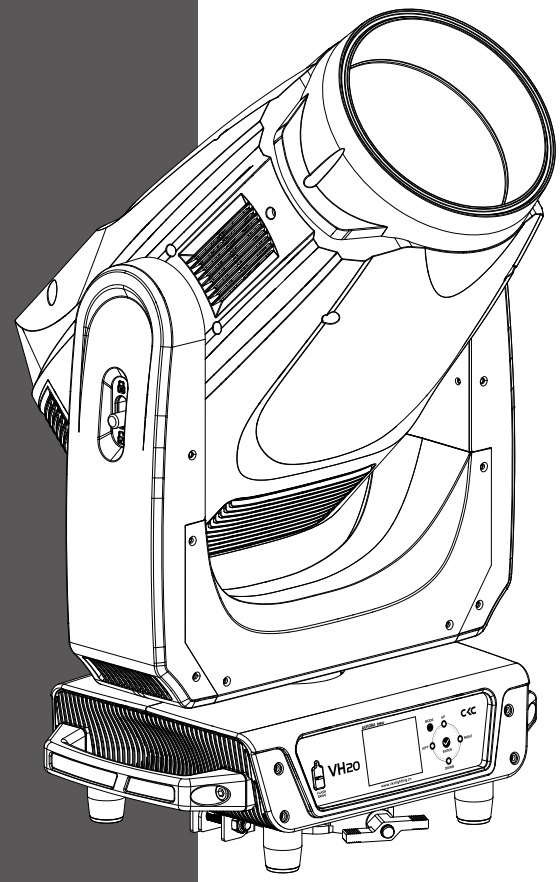

www.ckclighting.com

Before carrying out any installation, maintenance, or cleaning of the lighting fixtures, please confirm that the power has been cut off! Before using this fixture, please read this manual. Our company reserves the right to change product design and specifications without prior notice.

CKC LIGHTING CO.,LTD

Addr.:335 Nansha Avenue, Tung Chung Town,
Nansha District, Guangzhou City, China.
TEL：(020)3920 4506 FAX：(020)3920 4631
WEB：www.ckclighting.com

CONTENTS

1. Security Warning Information 1

2. Product Introduction 3

2.1 Exterior dimensions 3
2.2 Fixture packaging accessories 4

3. Main technical parameters of the equipment 3

4. Packaging and transportation 10

4.1 Disassemble packaging 10
4.2 Equipment installation 10

5. Installation Requirements Explanation 10

5.1 Clamp installation 10
5.2 Fixture installtion 11
5.3 Hanging Installation Diagram 12

6. Power and signal connection 12

6.1 Power and signal socket 12
6.2 Power Connect 12
6.3 Signal Connect 13

7. Control panel 14

7.1 Panel Introduction 14
7.2 System menu 14

8. DMX control channel table 16

9. Control circuit diagram 21

10. Regular maintenance 22

10.1 Cleaning and maintenance 22
10.2 Fault analysis and handling 22

www.ckclighting.com

★ Statement ★

- This manual contains important information on safe use and installation. Please read it carefully and follow the requirements for operation and installation. Please keep this manual properly;
- The equipment has good performance and complete packaging when it leaves the factory. The operator should strictly follow the warning items and operating instructions stated in the manual. Any malfunction or damage caused by misuse or neglect of the manual is not within the scope of our company's responsibility and warranty;
- The relevant information in this manual is for reference only. All lighting products are subject to the actual product. Any changes will not be notified separately, and our company reserves the right of final interpretation.

1. Security Warning Information

Attention !

Please read the safety requirements information in this section carefully before installing, powering on, operating, or repairing the lighting fixtures.

- This product is for professional use and is not suitable for other purposes;
- After receiving the lighting fixtures, please check if the packaging is complete and unpack to check if the equipment has been damaged due to transportation. If there is any damage caused by transportation, please do not use this lamp and contact local technicians or manufacturers as soon as possible;
- When transporting again, please use the original packaging materials;
- If there is obvious damage to the machine casing, it should be replaced in a timely manner;
- When hanging lamps, it is necessary to verify that the hanging equipment can withstand more than 6 times the weight of the lamp. After installation, it is necessary to verify that the lamp cover and installation buckle are secure and undamaged. At the same time, a safety rope should be used as an auxiliary safety for the lamp and fixed on the truss;
- The light source inside this luminaire should be replaced by the manufacturer, its service agent, or a similarly qualified person;
- If you have any other questions about how to safely operate the equipment, please contact our technical personnel or call our service hotline;
- This product has a protection level of IP30 and can be used both indoors and outdoors;
- Avoid direct external strong light shining on the lens, which may cause the lens to focus and burn out internal components.

- Lighting fixtures should be kept clean and avoid prolonged use in overheated or dusty environments to prevent contact with chemical liquids;
- When using the product, attention should be paid to avoiding serious or fatal injuries caused by fire, heat, electrical shock, and ultraviolet radiation. Before powering on or installing, read the instruction manual first. Follow the safety precautions for operation and pay attention to the warning signs on the instructions and equipment;
- Only professionals are allowed to install, operate, and maintain lighting fixtures, and strictly follow the procedures stated in the operating instructions.

- The eyes cannot directly look at the luminous object;
- Do not connect this device to any dimmer;
- If visible damage occurs to the protective casing, lens, and display screen on the lighting fixture, it is considered as damage to the point of loss;
- Please do not place any filters or other items at the light outlet, and do not replace non original parts;
- The minimum safe illumination distance of the lamp is 15m.

- Before installation, please confirm that the power supply voltage used matches the voltage indicated on the light fixture. Each lighting fixture should be properly grounded and electrically installed according to relevant standards;
- Please disconnect the power before repairing or cleaning the equipment;
- During the operation of the lighting fixtures, touching the wires is prohibited to prevent electric shock;
- If the external soft cable or wire of this lamp is damaged, the wire should be replaced by the manufacturer, its agent, or a similarly qualified person to avoid danger;
- Avoid flammable liquids, water, or metal conductors from entering the interior of the lamp to prevent electric shock or fire. If any foreign objects enter the lamp, immediately cut off the power supply;
- When multiple lamps are operated in series, the signal lines can be connected in multiple ways, but the power supply must be connected separately.

- The lighting fixtures work normally at -20 ℃ to 45 ℃ . When replacing any components or accessories in the equipment, ensure that the power is disconnected to prevent electric shock and injury;
- The maximum surface temperature of the lamp during operation can reach 78 ℃ , please do not touch it with bare hands.

- The lighting fixtures must be installed in a sufficiently ventilated area, at least 0.5m away from adjacent surfaces, to ensure that no ventilation holes are blocked;
- Do not install the lighting fixtures directly on flammable objects;
- The minimum distance between all outer surfaces of the lamp and combustible materials is 0.5m.

www.ckclighting.com

2. Product Introduction

2.1 Exterior dimensions of lighting fixtures

397 × 265 × 683 mm

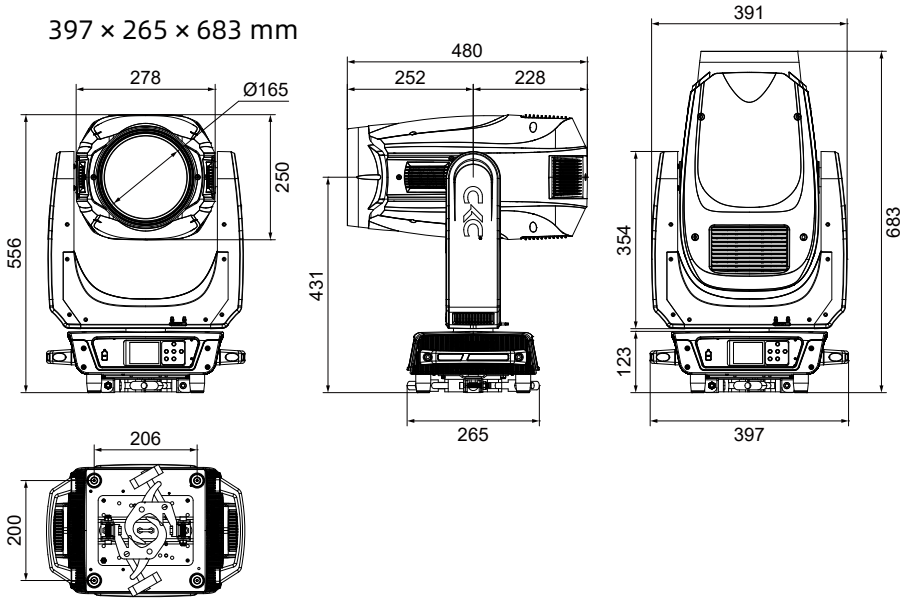

2.2 Packaging accessories

Name	QTY	
Safety cable	1	PCS

3. Main technical parameters of the equipment

Product execution standards:

GB43472-2023、GB/T7000.1-2023、GB/T7000.217-2023

● Electrical parameter

Rated input voltage: AC 100V-240V~ 50Hz/60Hz
Rated power of the entire fixture: 733W
Power factor: 0.99F@220V
Input Current: 3.289A@220V

● Optical system

Source: OSRAM 550W Lamp
Beam angle: 1.9 ~ 26°
Spot angle: 2.7 ~ 42°
Output luminous flux: 23000 Lm

● Source lifespan

>4000 hours

Replace lamp

1. Use a screwdriver to loosen the two quick-lock screws at location **A**. Remove and take out the head rear cover assembly.

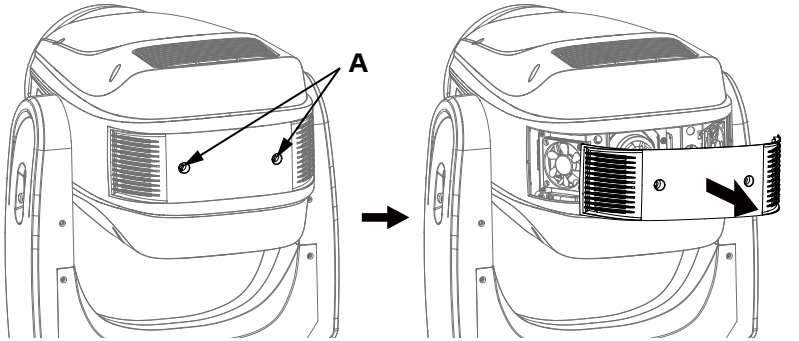

2. Unplug the bulb power cable at **B**. Then, rotate the bulb counterclockwise by 45° and remove it.

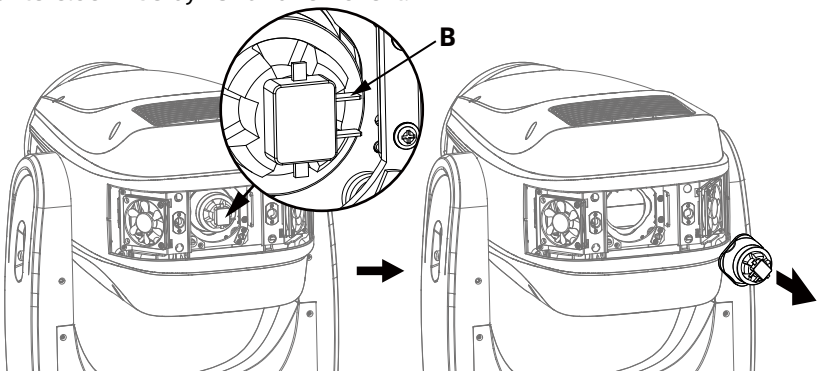

3. Replace with a new bulb. Align it with the slot and insert it into the fixed groove. Rotate the bulb clockwise by 45° , then plug in the bulb power cable at **B**.;

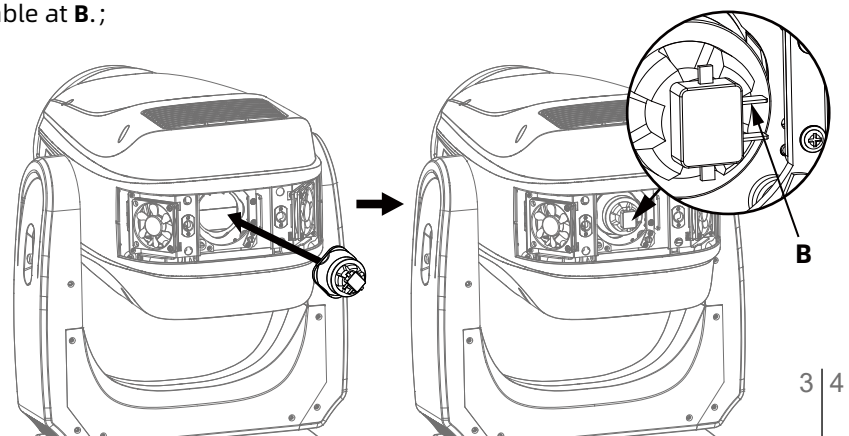

www.ckclighting.com

4. Align the quick-lock screw holes on the rear cover assembly with the quick-lock bases for installation. Then, use a screwdriver to tighten the quick-lock screws at location **A**.

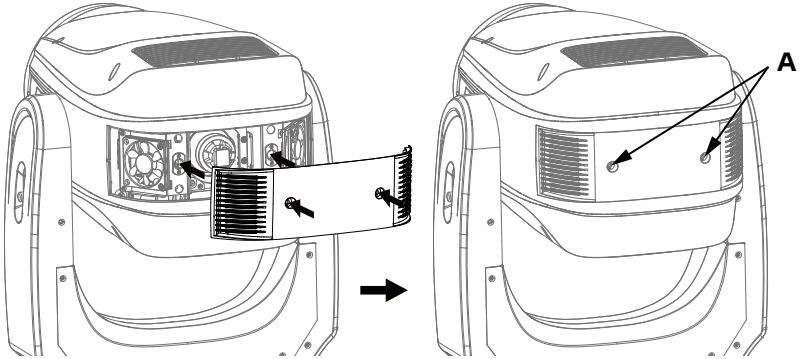

Bulb Center Adjustment

If the brightest spot of the light beam deviates from the center point, use a screwdriver to adjust the two screws (C and D) on the bulb mounting groove. These screws allow for adjusting the bulb's position forward/backward (C) and left/right (D) respectively, moving the brightest spot to the center of the beam.

Deviation from the center point

The center point is correct

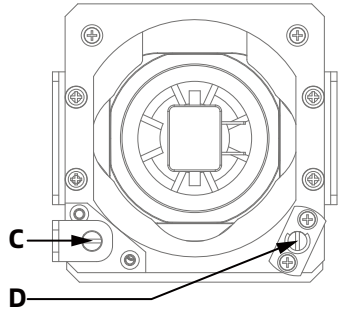

● **Color system**

CCT:6500K

CRI：78

Color wheel:13+1

CMY

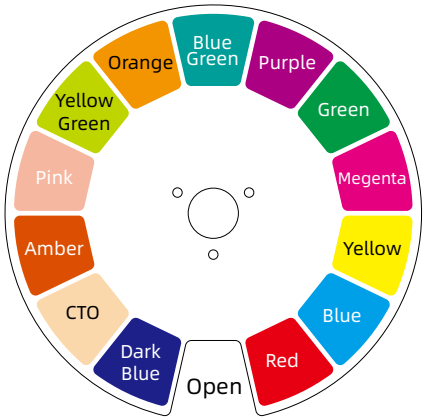

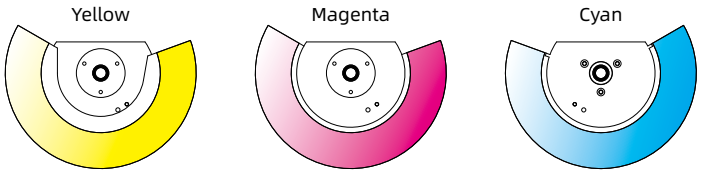

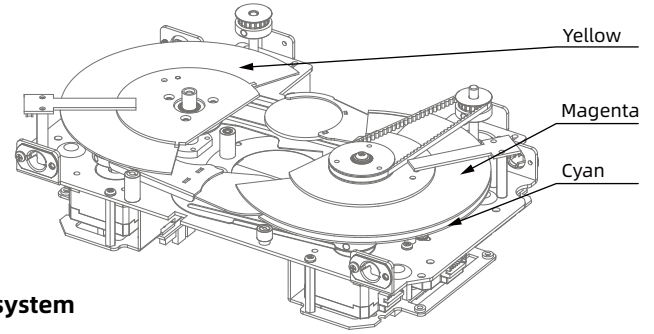

● **Gobo system**

Rotation gobo wheel：9 + 1

Gobo outer diameter：17mm±0.2mm　　Internal diameter：12mm

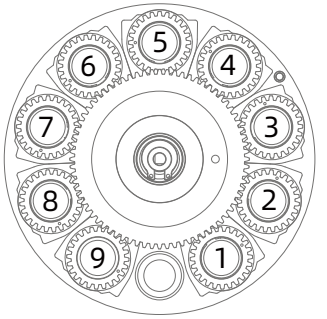

Open

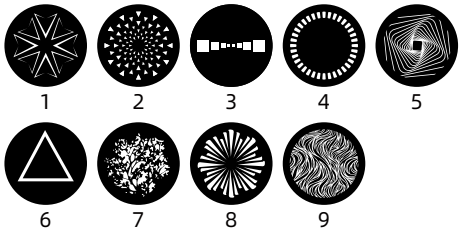

Fixed gobo wheel：13 + 1

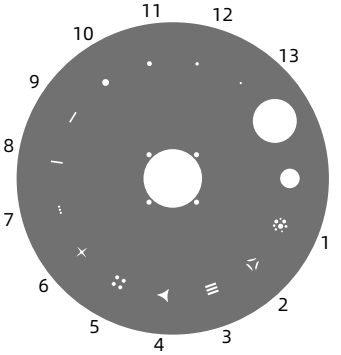

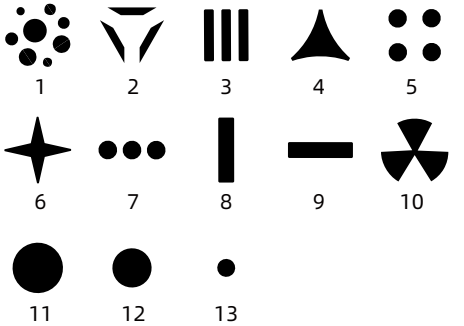

www.ckclighting.com

Gobo replace

1.Unplug the power and signal adapter cable at point **A**, and use a screwdriver to remove the two screws at point **B**. Then you can take out the component;

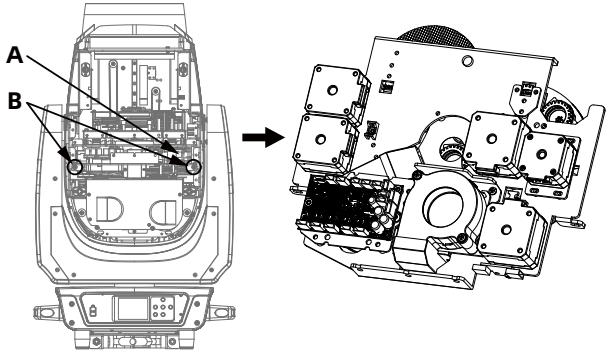

2. Rotate the gear seat to be replaced to the notch **C** on the sheet metal pattern plate. Then, gently lift the driven gear upward from the edge and pull it out slowly to remove the individual pattern seat.

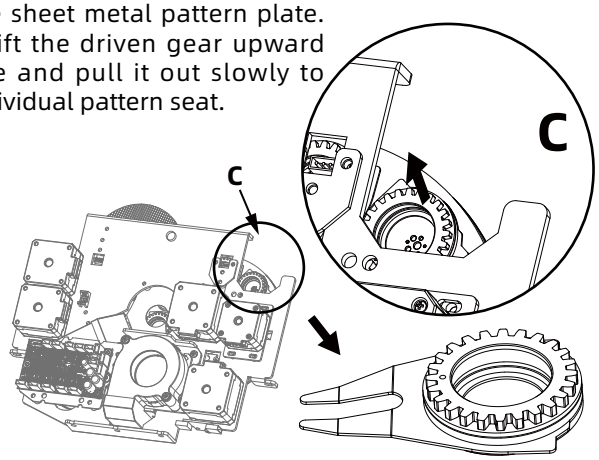

3.Use tweezers or other small grippers to remove the snap spring at point **D** (If the pattern piece is coated with glass glue for fixation, please use a professional cleaning agent to remove the glass glue before removing the snap spring to avoid damaging the gobo);

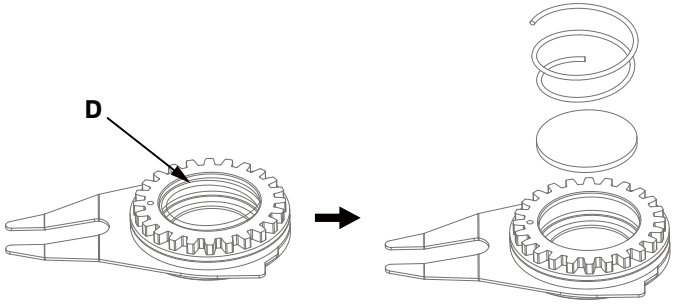

4.When assembling the gobo, avoid touching it directly with your hands. As shown in **E**, align the notch of the gobo with the recess of the driven wheel component (the coating surface of the gobo should face the light source);

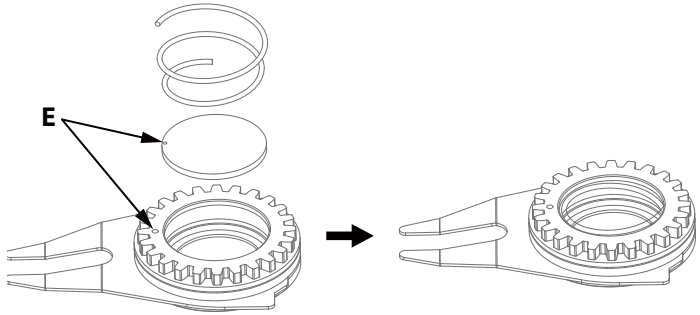

5.Insert the gobo holder into the drive wheel assembly, as shown in **F**, and reinstall the gobo holder in the order it was removed; The positioning point of the gobo holder should be aligned with the positioning point of the driving wheel; After installation, simply reinstall the gobo wheel component onto the light fixture.

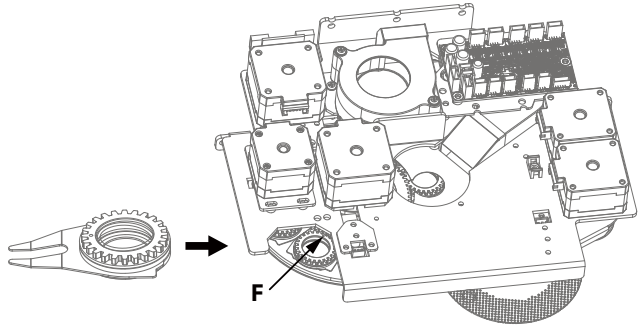

● **Animation**

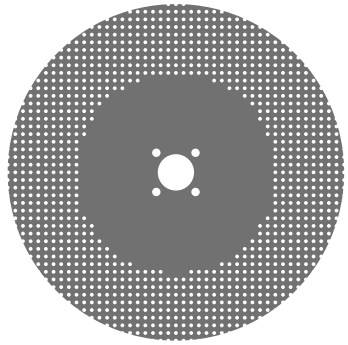

www.ckclighting.com

● **Pan/Tilt**

Pan scan:
540° or 630° 8-bit/16bit recision scanning
Tilt scan:
270° 8-bit/16bit precision scanning

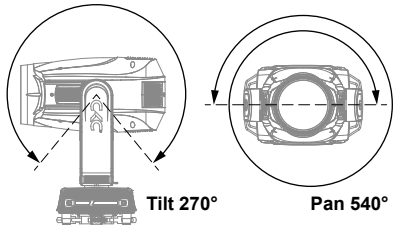

● **Control and programming**

Control channel：27CH/32CH
Protocol：DMX512，RDM
Data connect：3 PIN XLR

● **Illumination draw**

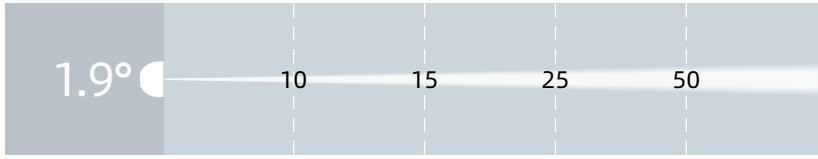

Lux	531700	234200	58010	19000
Diameter(m)	0.33	0.50	0.79	1.57

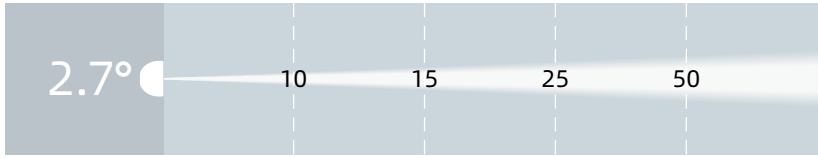

Lux	348300	153300	37420	15800
Diameter(m)	0.47	0.71	0.83	0.99

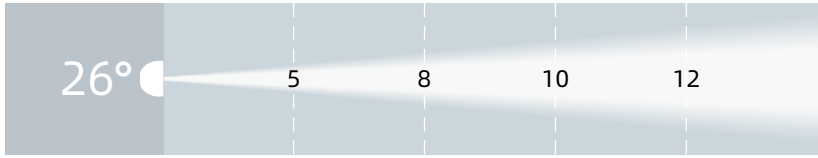

Lux	10780	3830	2193	1770
Diameter(m)	2.31	3.69	4.62	5.54

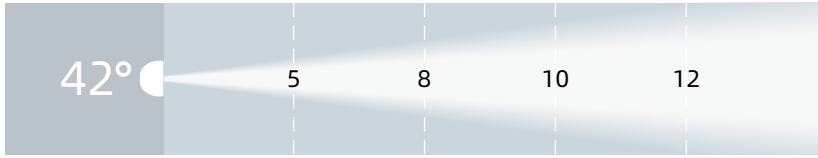

Lux	7053	2298	1614	1204
Diameter(m)	3.84	6.14	7.68	9.21

● **Other effect function**

Fast electronic strobe：1~15Hz
Prism 1：6 Linear + 12 Prism
Frost：1 heavy frost
Prism 2：32 Prism

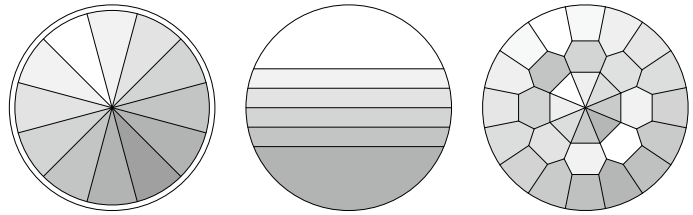

● **Other features and functions**

Weight：28.4 KG

4. Packaging and transportation

4.1 Disassemble packaging

Notice：After receiving the fixture, please unpack and check for any damage caused by transportation. If there is any damage caused by transportation, please do not use this fixture and contact the local technical personnel or manufacturer as soon as possible.

4.2 Equipment packaging

1). Disconnect the power supply before packaging the lighting fixtures to allow them to cool completely;
2). Flight cases can only be stacked in two layers and are not allowed to be reversed.

5. Installation Requirements Explanation

5.1 Clamp install

The lighting fixtures can be installed on the stage or on any direction of the truss, and the clamp can be quickly and easily locked onto the truss.

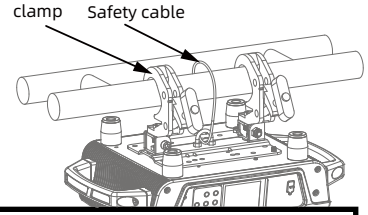

Warning!

The fixture uses an integrated clamp. To use it, lift the clamp up and then rotate it 180° to lock onto the truss. Additionally, a separate safety cable must be connected to the hole on the base. Note: Do not connect the safety cable to the carrying handle.

www.ckclighting.com

Integrated clamp installion

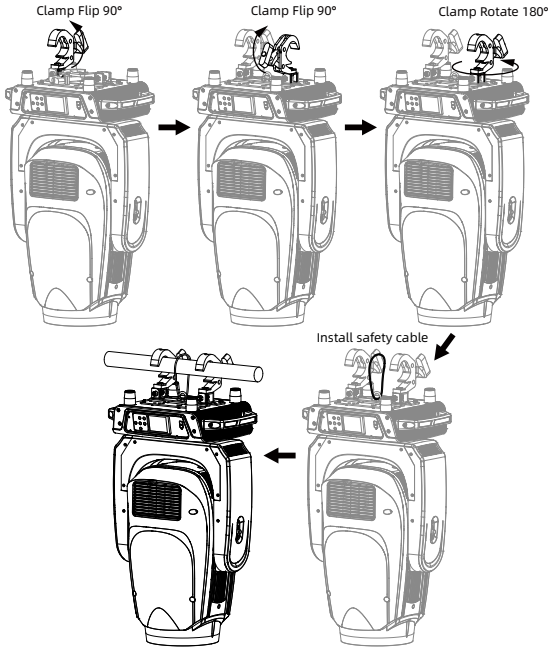

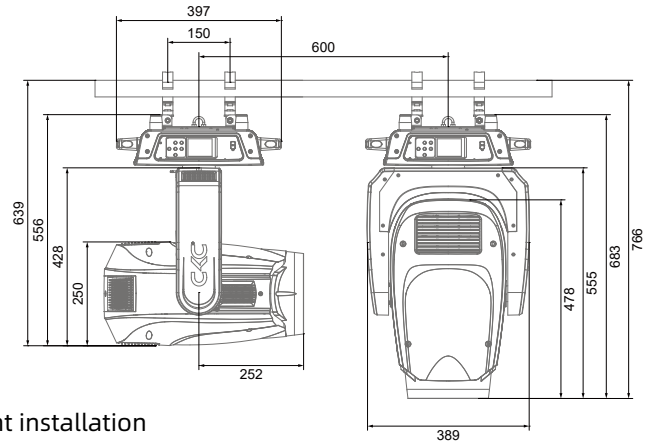

5.2 Equipment installation

1). Before installation, it is necessary to verify that the lamp hook and safety rope are not damaged, and that the installation object can withstand 6 times the total weight of the lamp and cable accessories;

2). The fixture uses an integrated clamp fixed to the base. Pull the clamp outward; one of the clamps is rotatable. Rotate it clockwise by 180° to align it with the other clamp. (The actual shape of the clamps shall prevail.)

5.3 Hanging Installation Diagram

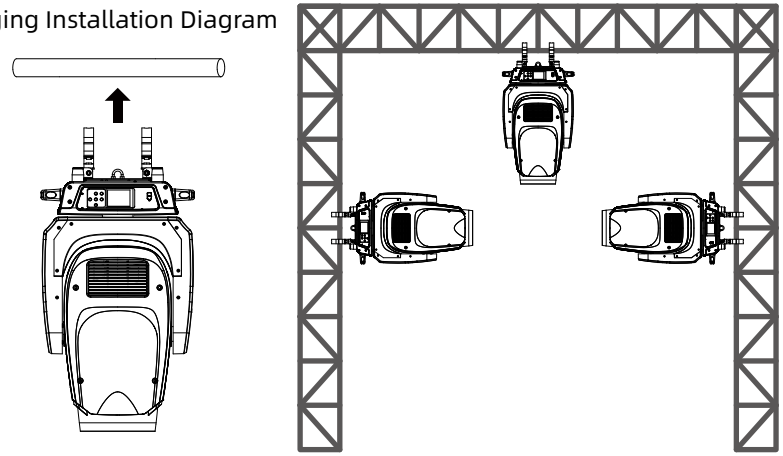

6. Power、Signal connect

6.1 Power and signal socket

1.Fuse holder
2.Power input
3.Power output
4.3 PIN XLR male
5.3 PIN XLR female

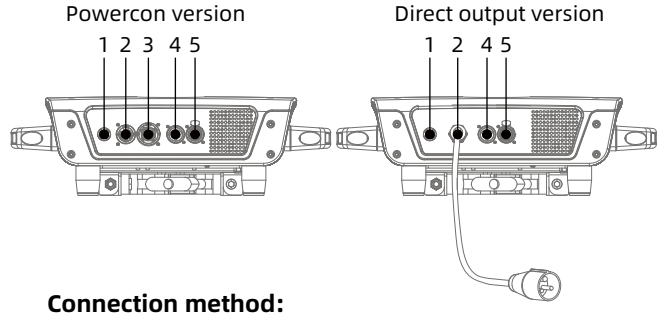

6.2 Power connect

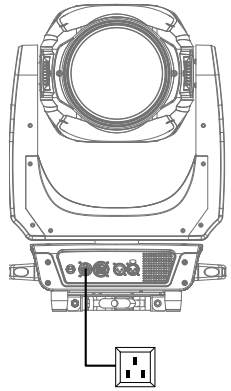

Connection method:

L(live wire) - brown wire

E(Ground wire) - yellow/green dual color line

N(Zero Line) - Blue Line

When connecting the power supply, please note that the voltage and frequency of the power supply must match the voltage and frequency marked on the light fixture. When multiple fixtures are used simultaneously, it is recommended to connect the power supply of each fixture separately, so that each fixture can be individually controlled for power on/off.

Attention: When connecting the power supply, the ground wire (yellow/green dual color wire) must be safely grounded and comply with all relevant electrical installation standards.

Power In

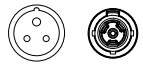

Straight-out version Powercon

This product uses Powercon In/Out to connect power cords. Due to power limitations, a 2-square 240V power cord can carry up to 3 products.

www.ckclighting.com

Waining !

- Do not connect too many fixtures or overload a single power cord;
- Do not use power cords with damaged insulation layers, and do not place power cords on other wires;
- When the fixture is not in use or cleaned, please unplug the power cord; Do not forcefully unplug or drag the power cord directly.

6.3 Signal connect

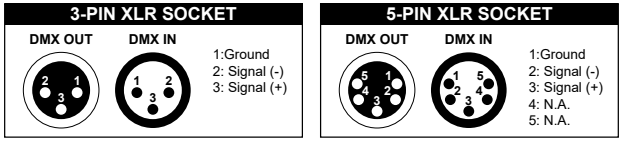

The lighting fixtures are equipped with standard DMX XLR input and output sockets. Please use DMX512 shielded twisted pair signal cables or Category 5 or above network twisted pair cables for connection. The typical connection distance for DMX signal lines is 150 meters. When transmitting signals over long distances, a DMX512 signal amplifier must be added.

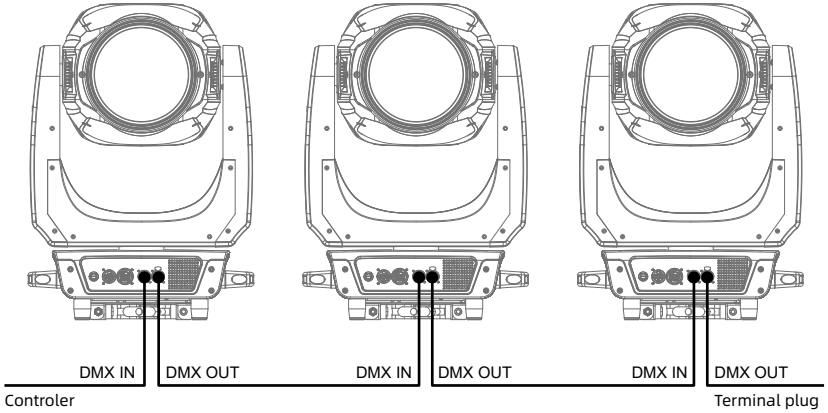

Connect a shielded twisted pair signal cable from the DMX output port of the controller to the DMX input port of the first device, and from the DMX output port of the first device to the DMX input port of the second device, and so on, until all the lamps are connected. Then install a terminal plug on the last 3 pin socket of each connected lamp output. (Weld a 4/1W, 120 Ω resistor between the 2 and 3 pins of a 3 or 5 core pin XLR plug).

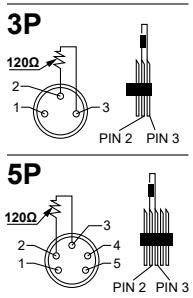

7. Control panel

7.1 Panel Introduction

● Adopting a 2.8 "LCD display screen, the operation panel is equipped with a rechargeable battery, which can enter the menu to set address codes and make other settings without powering on;

● Press the MODE key to view or modify the lighting function settings, and press the UP, DOWN, LEFT, and RIGHT keys to select the function menu;

● Press the ENTER key to confirm your selected function menu, which will take you to the corresponding sub menu in the menu. Each menu item represents a specific function of the lighting fixture (as shown in the table below);

● Press the ENTER key to save your modifications or enter a submenu, and press the UP or DOWN key to modify values (increase or decrease values); Press the MODE key to return to the previous menu or exit.

● Press the MODE key to return to the previous menu or exit.

7.2、System menu

Note: The gray color block is the default setting value

	Software Update Please Wait... CKC Fixture Type Check VH20 Motor Reset		
SET	Dmx Presets	A001~AXXX	
	User Mode	Standard Extend	
	Status	No DMX Mode P.Reverse T.Reverse Pan Degree Feedback Move.Speed Hibernation	Black/Hold/Auto ON/OFF ON/OFF 630/540 ON/OFF Speed 1~ 4 OFF ,01M~99M, 15M
	Lamp Control	OFF/ON	

www.ckclighting.com

Fun-ction	Power Mode	Full Mode/Eco Mode	
	Temp. C/F	Celsius Fahrenheit	
	Fan Set	Head Fan	Auto
		Base Fan	Auto
	LCD.Set	Backlight Flip Display Key Lock DispFlash Language	01~60m OFF/ON OFF/ON OFF/ON English/Chinese
	Disp.Set	Channel Value Slave Set Auto.Prog	PAN..... Slave1,Slave2,Slave3 Master / Alone
	DFSE	OFF/ON	
	USB Update	OFF/ON	
Test	Reset.M	All Pan & Tilt Other	
	Test.Chan	PAN	
	Panel.Ctrl.	PAN =XXX :	
	Calibrate	-Password- PAN :	
	Time.Info	Current Total Time Lamp Time Timer PIN Clear Last	
	Temp. Info	Head Temp. Base Temp.	
	Fan Speed	Base Fan:xxxx RPM Blower 1: xxxx RPM Blower 2: xxxx RPM	
	Error. Info	Pan,Tilt.....	
	Model. Info	VH 20	
	Software.V	1U V1.X.X 2U V1.X.X 3U V1.X.X :	

8. DMX channel table:

ST.	EX.	Function	Values
1	1	Pan	000 ~ 255 Pan Movement (540/630)
2	2	Pan fine	000 ~ 255 Pan Fine
3	3	Tilt	000 ~ 255 Tilt Movement(270)
4	4	Tilt fine	000 ~ 255 Tilt Fine
5	5	Dimmer	000 ~ 255 Intensity 0 to 100%
6	6	Dimmer fine	000 ~ 255 Dimmer Intensity Fine
7	7	Strobe functions	**Shutter, Strobe:**
			000 ~ 031 Shutter Closed
			032 ~ 063 Shutter Open
			064 ~ 095 Slow to Fast Strobe
			096 ~ 127 No action, Shutter Open
			128 ~ 159 Slow to Fast Pulse Effect
			160 ~ 191 No Action, Shutter Open
			192 ~ 223 Slow to Fast Random Strobe
			224 ~ 255 No Action, Shutter Open
8	8	Cyan	000 ~ 255 0% to 100%
	9	Cyan Fine	000 ~ 255 0% to 100%
9	10	Magenta	000 ~ 255 0% to 100%
	11	Magenta Fine	000 ~ 255 0% to 100%
10	12	Yellow	000 ~ 255 0% to 100%
	13	Yellow Fine	000 ~ 255 0% to 100%
			Color Wheel :
			000 - 005 Colour off (open)
			006 - 118 Open → Color1..Color13 → Open
			119 - 120 Open
			121 - 125 Deep Red
			126 - 130 Blue
			131 - 135 Yellow
			136 - 145 Magenta
			146 - 150 Green

www.ckclighting.com

11	14	Colour Wheel	151 - 155 Lavender
			156 - 160 Cyan
			161 - 165 Orange
			166 - 170 Mint
			171 - 175 Pink
			176 - 180 Amber
			181 - 185 CTO 3200K
			186 - 190 Deep Blue
			191 - 192 Colour off (open)
			193 - 223 Color Wheel rot. Fast -> Slow, CW
			224 - 224 Color Wheel rot. Stop
			225 - 255 Color Wheel rot. Slow -> Fast, CCW
12	15	Colour Wheel Fine	000 ~ 255 0% to 100%
13	16	GoboWheel 1	**Rotanting Gobos:**
			000 - 002 Beam Mode
			003 - 005 Spot Mode
			006 - 015 Gobo 1
			016 - 025 Gobo 2
			026 - 035 Gobo 3
			036 - 045 Gobo 4
			046 - 055 Gobo 5
			056 - 065 Gobo 6
			066 - 075 Gobo 7
			076 - 085 Gobo 8
			086 - 095 Gobo 9
			096 - 105 Gobo 1 Shake (Slow-Fast)
			106 - 115 Gobo 2 Shake (Slow-Fast)
			116 - 125 Gobo 3 Shake (Slow-Fast)
			126 - 135 Gobo 4 Shake (Slow-Fast)
			136 - 145 Gobo 5 Shake (Slow-Fast)
			146 - 155 Gobo 6 Shake (Slow-Fast)
			156 - 165 Gobo 7 Shake (Slow-Fast)
			166 - 175 Gobo 8 Shake (Slow-Fast)
			176 - 190 Gobo 9 Shake (Slow-Fast)

Infor-mation			191 - 192 Open
			193 - 223 Gobo Wheel rot. Fast -> Slow, CW
			224 - 224 Gobo Wheel rot. Stop
			225 - 255 Gobo Wheel rot. Slow -> Fast, CCW
14	17	Gobo 1 Rotation	**Rotanting Gobo Index:**
			000 ~ 005 Gobo1 Rot. Off
			006 ~ 128 Gobo Position 0° ... 540°
			129 ~ 191 Gobo Rotation, Slow -> Fast, CW
			192 ~ 192 Gobo Rotaion Stop
			193 ~ 255 Gobo Rotation, Fast -> Slow, CCW
15	18	Gobo 1 Rotation Fine	000 ~ 255 Gobo indexing fine
16	19	Gobo Wheel 2	**Fixed Gobo:**
			000 - 005 Open
			006 - 011 Gobo 1
			012 - 017 Gobo 2
			018 - 023 Gobo 3
			024 - 029 Gobo 4
			030 - 035 Gobo 5
			036 - 041 Gobo 6
			042 - 047 Gobo 7
			048 - 053 Gobo 8
			054 - 059 Gobo 9
			060 - 065 Gobo 10
			066 - 071 Gobo 11
			072 - 077 Gobo 12
			078 - 083 Gobo 13
			084 - 095 Open
			096 - 101 Gobo 1 Shake (Slow-Fast)
			102 - 107 Gobo 2 Shake (Slow-Fast)
			108 - 113 Gobo 3 Shake (Slow-Fast)
			114 - 119 Gobo 4 Shake (Slow-Fast)
			120 - 125 Gobo 5 Shake (Slow-Fast)
			126 - 131 Gobo 6 Shake (Slow-Fast)
			132 - 137 Gobo 7 Shake (Slow-Fast)

www.ckclighting.com

			138 - 143 Gobo 8 Shake (Slow-Fast)
			144 - 149 Gobo 9 Shake (Slow-Fast)
			150 - 155 Gobo 10 Shake (Slow-Fast)
			156 - 161 Gobo 11 Shake (Slow-Fast)
			162 - 167 Gobo 12 Shake (Slow-Fast)
			168 - 173 Gobo 12 Shake (Slow-Fast)
			174 - 192 Open
			193 - 223 Gobo Wheel rot. Fast -> Slow, CW
			224 - 224 Gobo Wheel rot. Stop
			225 - 255 Gobo Wheel rot. Slow -> Fast, CCW
17	20	Zoom	000 ~ 255 Narrow to wide
18	21	Zoom fine	000 ~ 255 Narrow to wide
19	22	Focus	000 ~ 255 0% to 100%
20	23	Focus fine	000 ~ 255 0% to 100%
21	24	Prism Wheel 1	**Prism Wheel 1:**
			000 ~ 005 No Prism
			006 ~ 127 Prism 1
			128 ~ 255 Prism 2
22	25	Prism 1 Rotation	**Prism1 rotation:**
			000 005 Prism1 Rot. Off
			006 - 128 Prism1 Position 0 ... 540°
			129 - 191 Prism1 Rotation, Fast -> Slow , CW
			192 - 192 Prism1 Rotation Stop
			193 - 255 Prism1 Rotation, Slow -> Fast, CCW
23	26	Prism Wheel 2	**Prism Wheel 2:**
			000 - 005 No Prism
			006 - 255 Prism 3
24	27	Prism 2 Rotation	**Prism 2 Rotation:**
			000 - 005 Prism2 Rot. Off
			006 - 128 Prism2 Position 0 ... 540°
			129 - 191 Prism2 Rotation, Fast -> Slow, CW
			192 - 192 Prism2 Rotation Stop
			193 - 255 Prism2 Rotation, Slow -> Fast, CCW

25	28	Frost	000 ~ 255 0% to 100%
26	29	Animation	**Animation1:**
			000 ~ 005 Wheel Rot. Off
			006 ~ 128 Wheel Position 0 ... 540°
			129 ~ 191 Wheel Rot. Slow -> Fast, CW
			192 ~ 192 Wheel Rot. Stop
			193 ~ 255 Wheel Rot. Fast -> Slow, CCW
	30	Animation Fine	000 - 255 0% to 100%
	31	Pan/Tilt Speed	000 - 255 Pan/Tilt Fast -> Slow
27	32	Device settings	**Device settings:**
			000 - 001 No function
			002 - 003 OFF Display Backlight
			004 - 005 On Display Backlight
			006 - 035 No function
			036 - 050 Lamp On (Hold 3s)
			051 - 065 Lamp Off (Hold 5s)
			066 - 080 Invert Pan on (Hold 3s)
			081 - 095 Invert Pan off (Hold 5s)
			096 - 110 Invert Tilt on (Hold 3s)
			111 - 125 Invert Tilt off (Hold 5s)
			126 - 144 Standard CRI(Hold 3s)
			145 - 163 High CRI(Hold 3s)
			164 - 200 No function
			201 - 215 Reset Pan/Tilt (Hold 3s)
			216 - 230 Reset only Head (Hold 3s)
			231 - 255 Reset All Functions (Hold 3s)

www.ckclighting.com

9. Control circuit diagram

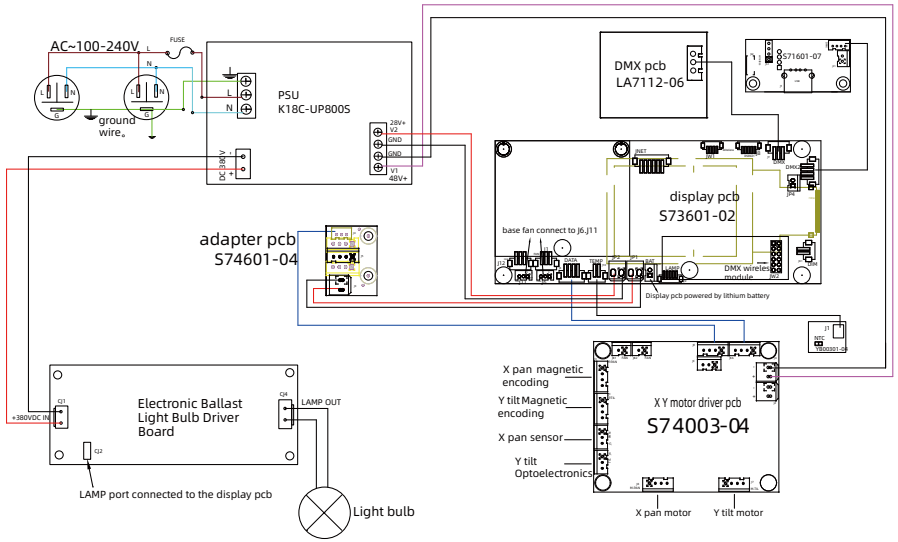

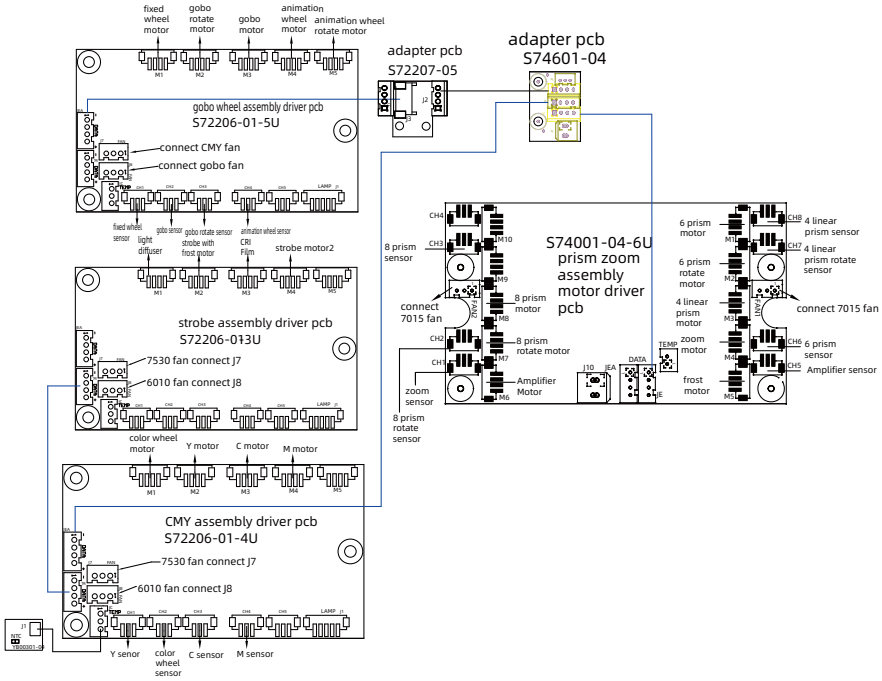

10. Regular maintenance

10.1 Cleaning and maintenance

Lighting fixtures require daily cleaning and maintenance, and their service life largely depends on the operating environment and standards. If you have any questions, please consult our technical engineers for advice. Maintenance and repair work not included in this book should be entrusted to our qualified technical engineers.

Attention! Damage caused by dust, e-liquid, or other reasons, as well as abnormal use, is not covered by the warranty.

Waining !

Before opening any lid, disconnect the power supply. Cleaning optical components requires gentle wiping as the coating surface is prone to scratching. Do not use damaging liquids or hard objects , as they may damage the plastic or coating surface.

- When the lens is cracked or otherwise damaged, it should be replaced in a timely manner;
- When the brightness significantly decreases, the LED may have reached its expiration date and should be replaced in a timely manner;
- When the fixture cannot start, please check if the fixture power fuse is blown. If it is blown, a fuse of the same specification must be used for installation;
- The fixture is equipped with a temperature protection device. When the temperature is too high, the protection device will automatically reduce power.
- When this situation occurs, please check whether the fan is running normally, whether the fan and fan mesh are clogged with dust, identify the fault and repair it before starting the fixture. Please note that only qualified technicians are allowed to carry out maintenance work;
- To maintain smooth movement of the focusing lens, it is recommended to lubricate the guide rail of the focusing lens every three months. Excellent and high-temperature resistant lubricating grease should be used, and excessive grease should not be used as it can easily dirty adjacent components.

10.2 Fault analysis and handling

Fault description	Analysis	Processing method
No action after power on	Check if the power switch is turned on	Turn on
	Check if the fuse is blown	Replace
	Check if the output of PSU is normal	Detecting voltage
	Check if poor contact in the internal circuit	Reconnect

www.ckclighting.com

Uncontrolled lighting fixtures	Check if the DMX signal cable is connected correctly (If there is no signal, the display screen will flash)	Reconnect or replace
	Check if the address code is correct and if the DMX mode of the lighting fixture matches the settings	Reconfirm
	The main control PCB is damaged	Replace
Not bright	lamp bulb aging or damage	Replace
	Power PCB malfunction	Check/ Replace
	Loose or poor contact of the circuit	Reconnect
	PSU malfunction	Replace
Automatically turn off or dim the lights	lamp bulb aging	Replace
	Damaged cooling fan or abnormal wind speed	Replace
	Check the power output of the fan	Check/ Replace
	The temperature control switch is damaged	Replace
Gobo wheel misalignment or abnormal control	Poor contact of motor wire	Reconnect
	Corresponding motor drive board malfunction	Refixed
	Misalignment or magnetic damage between the magnetic tube and the positioning magnet	Adjust/Replace
	Motor malfunction	Replace
Weak light efficiency and uneven light spot	lamp bulb aging	Replace
	lamp bulb not centered with the lens	Adjust lamp bulb
	The optical mirror has accumulated dust or stains	Clean
	The optical mirror is damaged	Replace
Impure color	Weakening of light efficiency	Replace led PCB
	The color filter has accumulated dust or stains	Clean
	The color filter has been demolded or damaged	Replace

Gobo is unclear	The optical mirror has accumulated dust or stains	Clean
	The optical mirror is damaged	Replace
Head or base fan stops rotating	Check if the fan leads are installed properly or disconnected	Re connect
	Check if the fan is damaged	Replace
	Check if there are any other interfering objects within the operating range of the fan	Adjust
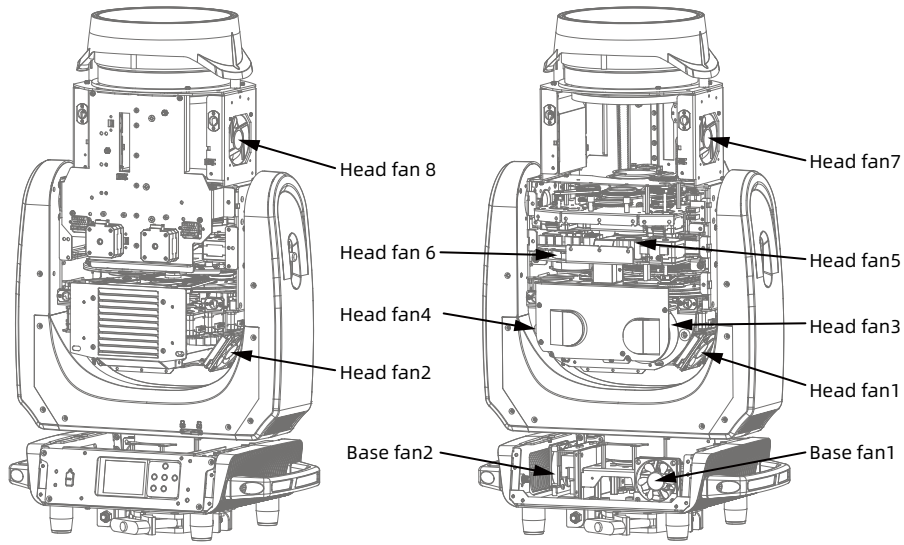
Attention! The above analysis is for abnormal reference only. Non professionals are not allowed to disassemble and repair the machine