LIGHT IT LIKE IT

EvoWash Plus

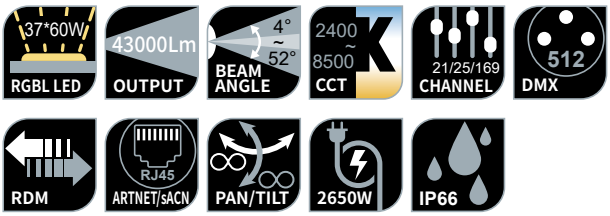

Adopts 37 × 60W RGBL LED light source
Total luminous flux 43,000 lumens
Beam Angle 4 ~ 52° zoom
CCT 2400 ~ 8500K
IP66 rating, resistant to harsh environments such as rain, dust, and extreme temperatures, suitable for both indoor and outdoor applications

OPTIC

- Source: 37 × 60W RGBL LED
- Output: 43000 Lm
- Beam angle: 4 ～ 52°
- CCT: 2400 ~ 8500K
- Source lifetime: >20000 H

EFFECT

- Strobe: 1~25Hz
- Uniform RGBL color mixing system and rainbow effect, single point LED control
- Create unlimited dynamic, unlimited color changes

CONTROL & PROGRAM

- Channel: 21CH/25CH/169CH
- Protocal: DMX512, RDM, ArtNet/sACN
- Data connector: 3PIN XLR, RJ45 In/Out
- Display: 2.4 inches screen
- NFC: The lighting fixtures do not require power on and can be directly set up, diagnosed, and perform other functions through the CKC app

SOFTWARE

- Via DMX signal to update
- Static waterproof fan, intelligent speed control
- Intelligent temperature protection to ensure LED service life

PAN & TILT MOVEMENT

- Pan & Tilt: infinite rotation (360°)

HOUSING

- Aluminum alloy structure + plastic (VO)
- Fan cooling
- Resistant to salt corrosion

POWER CONSUMPTION

- Rated input voltage: AC 100V~240V 50/60Hz
- Power: 2650 W

OTHER

- IP rating: IP66
- Work environment: -40°C ~ 45°C
- Startup environment: -20°C ~ 45°C

SIZE & WEIGHT

- Size: 546 × 388 × 530 mm
- N.W.: 35.4 kgs

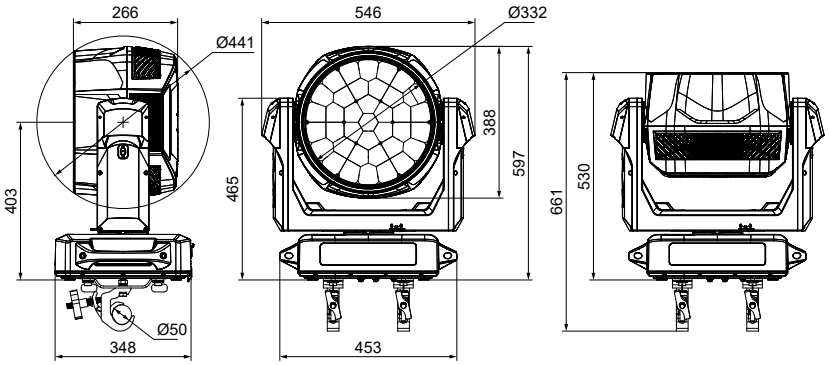

PHOTOMETRICAL DATA

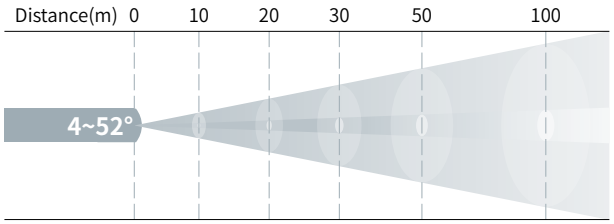

Lux 4°	31000	7750	3444	1240	310
Diameter(m)	0.70	1.40	2.10	3.49	6.98
Lux 52°	1350	338	150	54	
Diameter(m)	9.75	19.51	29.26	48.77	