Tourist PROXIMA HYBRID

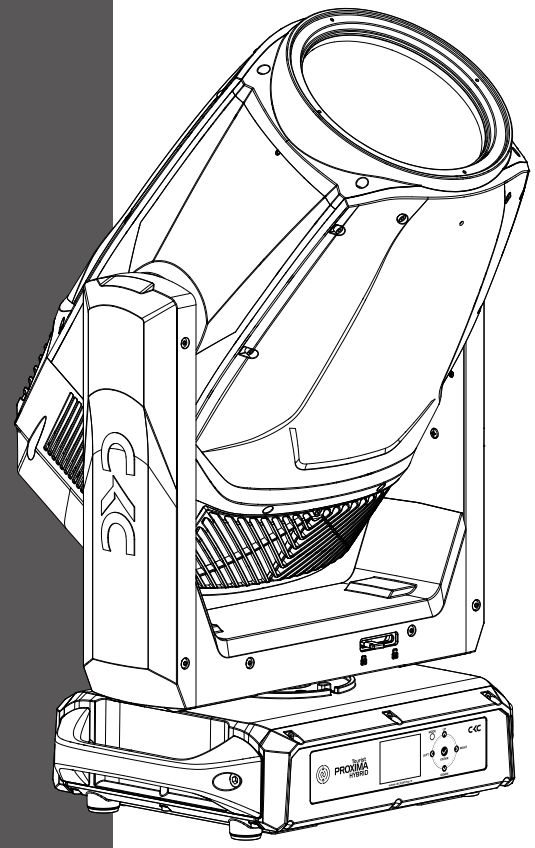

www.ckclighting.com

Before carrying out any installation, maintenance, or cleaning of the lighting fixtures, please confirm that the power has been cut off! Before using this fixture, please read this manual. Our company reserves the right to change product design and specifications without prior notice.

CKC LIGHTING CO.,LTD

Addr.:335 Nansha Avenue, Tung Chung Town,
Nansha District, Guangzhou City, China.
TEL：(020)3920 4506 FAX：(020)3920 4631
WEB：www.ckclighting.com

CONTENTS

1. Security Warning Information 1

2. Product Introduction 3

2.1 Exterior dimensions 3
2.2 Fixture packaging accessories 3

3. Main technical parameters of the equipment 3

4. Packaging and transportation 5

4.1 Disassemble packaging 5
4.2 Equipment installation 5

5. Installation Requirements Explanation 5

5.1 Clamp installation 5
5.2 Fixture installtion 6
5.3 Hanging Installation Diagram 6

6. Power and signal connection 7

6.1 Power and signal socket 7
6.2 Power Connect 7
6.3 Signal Connect 9

7. Control panel 10

7.1 Panel Introduction 10
7.2 System menu 10

8. DMX control channel table 12

9. Control circuit diagram 17

10. Regular maintenance 18

10.1 Cleaning and maintenance 18
10.2 Fault analysis and handling 18

www.ckclighting.com

★ Statement ★

- This manual contains important information on safe use and installation. Please read it carefully and follow the requirements for operation and installation. Please keep this manual properly;
- The equipment has good performance and complete packaging when it leaves the factory. The operator should strictly follow the warning items and operating instructions stated in the manual. Any malfunction or damage caused by misuse or neglect of the manual is not within the scope of our company's responsibility and warranty;
- The relevant information in this manual is for reference only. All lighting products are subject to the actual product. Any changes will not be notified separately, and our company reserves the right of final interpretation.

1. Security Warning Information

Attention !

Please read the safety requirements information in this section carefully before installing, powering on, operating, or repairing the lighting fixtures.

- This product is for professional use and is not suitable for other purposes;
- After receiving the lighting fixtures, please check if the packaging is complete and unpack to check if the equipment has been damaged due to transportation. If there is any damage caused by transportation, please do not use this lamp and contact local technicians or manufacturers as soon as possible;
- When transporting again, please use the original packaging materials;
- If there is obvious damage to the machine casing, it should be replaced in a timely manner;
- When hanging lamps, it is necessary to verify that the hanging equipment can withstand more than 6 times the weight of the lamp. After installation, it is necessary to verify that the lamp cover and installation buckle are secure and undamaged. At the same time, a safety rope should be used as an auxiliary safety for the lamp and fixed on the truss;
- The light source inside this luminaire should be replaced by the manufacturer, its service agent, or a similarly qualified person;
- If you have any other questions about how to safely operate the equipment, please contact our technical personnel or call our service hotline;
- This product has a protection level of IP66 and can be used both indoors and outdoors;
- Avoid direct external strong light shining on the lens, which may cause the lens to focus and burn out internal components.

- Lighting fixtures should be kept clean and avoid prolonged use in overheated or dusty environments to prevent contact with chemical liquids;
- When using the product, attention should be paid to avoiding serious or fatal injuries caused by fire, heat, electrical shock, and ultraviolet radiation. Before powering on or installing, read the instruction manual first. Follow the safety precautions for operation and pay attention to the warning signs on the instructions and equipment;
- Only professionals are allowed to install, operate, and maintain lighting fixtures, and strictly follow the procedures stated in the operating instructions.

- The eyes cannot directly look at the luminous object;
- Do not connect this device to any dimmer;
- If visible damage occurs to the protective casing, lens, and display screen on the lighting fixture, it is considered as damage to the point of loss;
- Please do not place any filters or other items at the light outlet, and do not replace non original parts;
- The minimum safe illumination distance of the lamp is 18m.

- Before installation, please confirm that the power supply voltage used matches the voltage indicated on the light fixture. Each lighting fixture should be properly grounded and electrically installed according to relevant standards;
- Please disconnect the power before repairing or cleaning the equipment;
- During the operation of the lighting fixtures, touching the wires is prohibited to prevent electric shock;
- If the external soft cable or wire of this lamp is damaged, the wire should be replaced by the manufacturer, its agent, or a similarly qualified person to avoid danger;
- Avoid flammable liquids, water, or metal conductors from entering the interior of the lamp to prevent electric shock or fire. If any foreign objects enter the lamp, immediately cut off the power supply;
- When multiple lamps are operated in series, the signal lines can be connected in multiple ways, but the power supply must be connected separately.

- The lighting fixtures work normally at -40 ℃ to 45 ℃ . When replacing any components or accessories in the equipment, ensure that the power is disconnected to prevent electric shock and injury;
- The maximum surface temperature of the lamp during operation can reach 74 ℃ , please do not touch it with bare hands.

- The lighting fixtures must be installed in a sufficiently ventilated area, at least 0.5m away from adjacent surfaces, to ensure that no ventilation holes are blocked;
- Do not install the lighting fixtures directly on flammable objects;
- The minimum distance between all outer surfaces of the lamp and combustible materials is 0.5m.

www.ckclighting.com

2. Product Introduction

2.1 Exterior dimensions of lighting fixtures

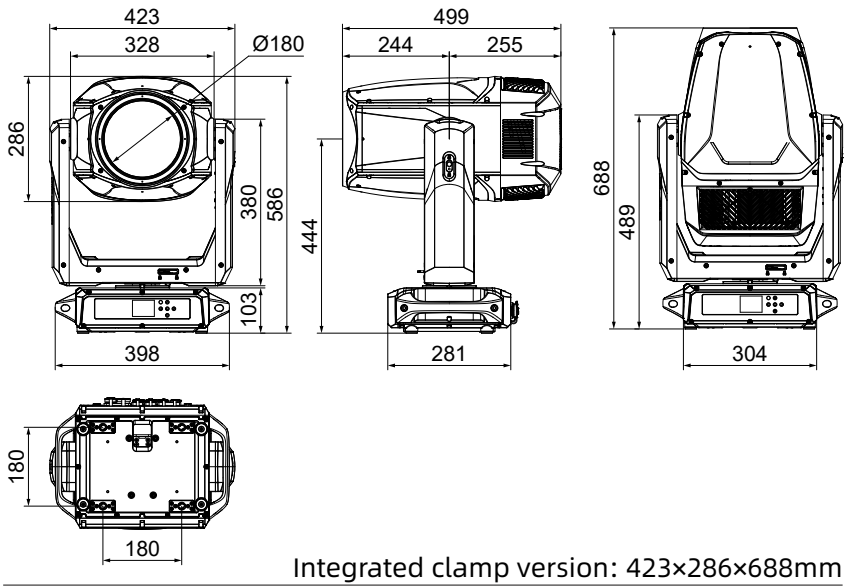

Integrated clamp version: 423×286×688mm

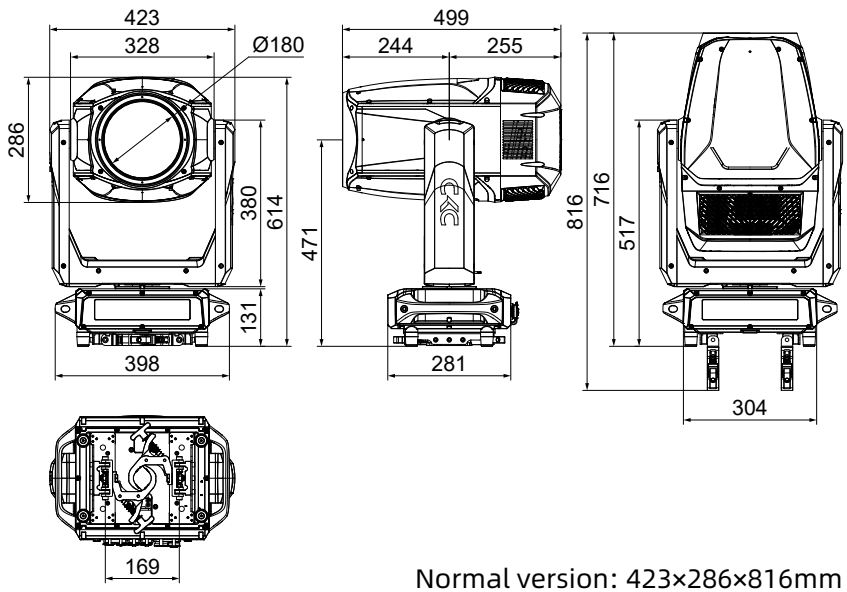

Normal version: 423×286×816mm

2.2 Packaging accessories

	Name	QTY
Normal version	Omega bracket	2 PCS
	Clamp	2 PCS
	Safety cable	1 PCS
Integrated clamp version	Safety cable	1 PCS

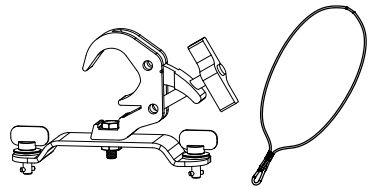

3. Main technical parameters of the equipment

Product execution standards: GB43472-2023、GB/T7000.1-2023、GB/T7000.217-2023

- **Electrical parameter**

  Rated input voltage: AC 100V-240V~ 50Hz/60Hz
  Power: 650W
  Power factor: 0.999F
  Input Current: 2.71A 220V

- **Source lifespan**

  >20000 hours

- **Color system**

  CCT: 8500K
  CRI: 71
  Color wheel: 17+1
  CMY

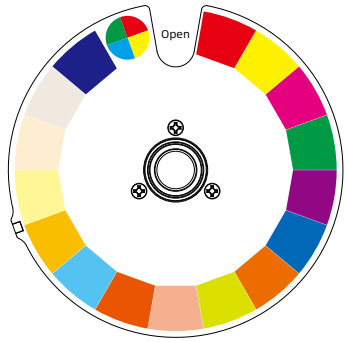

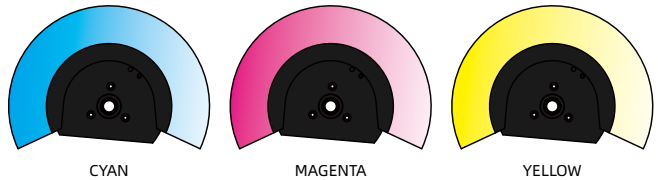

www.ckclighting.com

● **Gobo system**

Rotation gobo: 12+1
Gobo outer diameter: 11mm Internal diameter: 5mm Thickness: 1.1mm

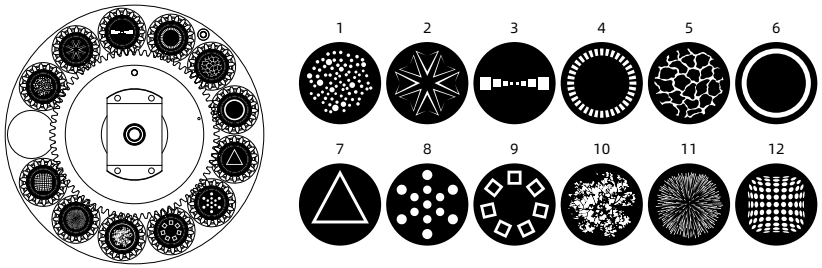

Gobo replace

a). Remove the two screws at location **A**, unplug the power and signal adaptercables, and extract the Gobo component;

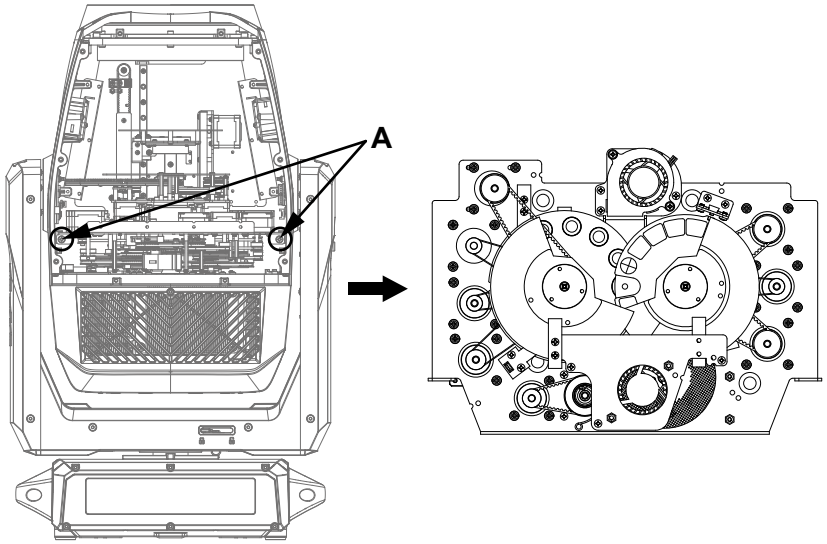

b). As shown in **B**, gently lift the driven wheel from the edge upwards from the front of the pattern plate and slowly pull it out to remove a single pattern seat;

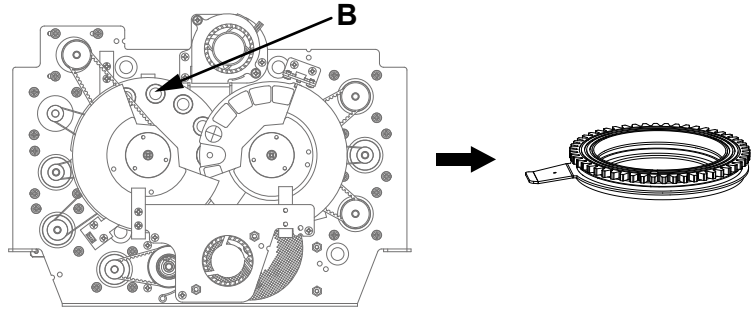

c). Use tweezers or other small grippers to remove the snap spring at point **C** (If the pattern piece is coated with glass glue for fixation, please use a professional cleaning agent to remove the glass glue before removing the snap spring to avoid damaging the gobo);

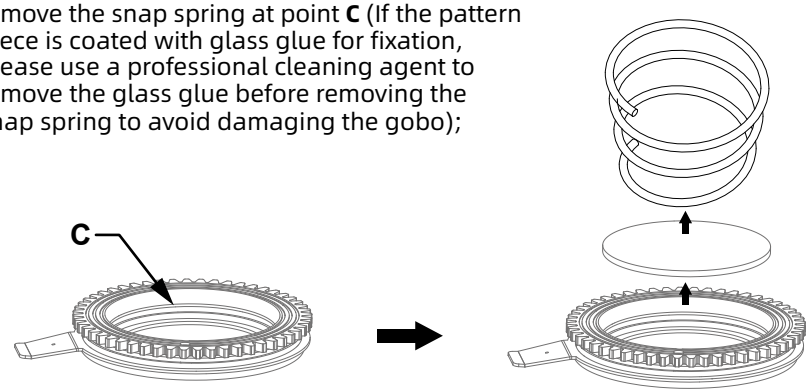

d). When assembling the gobo, avoid touching it directly with your hands. As shown in **D**, align the notch of the gobo with the recess of the driven wheel component (the coating surface of the gobo should face the light source);

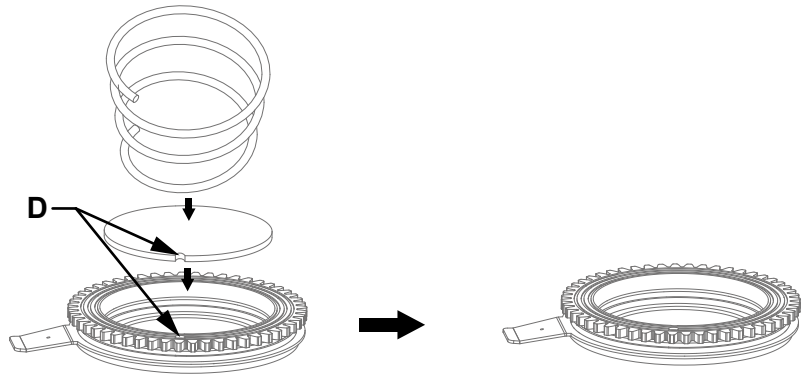

www.ckclighting.com

e). Insert the gobo holder into the drive wheel assembly, as shown in **E**, and reinstall the gobo holder in the order it was removed; The positioning point of the gobo holder should be aligned with the positioning point of the driving wheel; After installation, simply reinstall the gobo wheel component onto the light fixture.

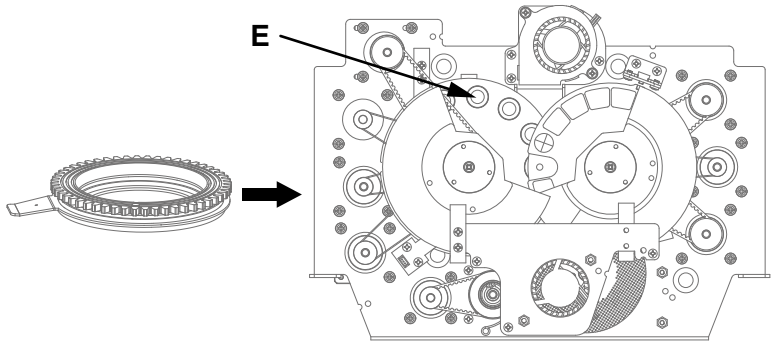

Fixed gobo：23+1

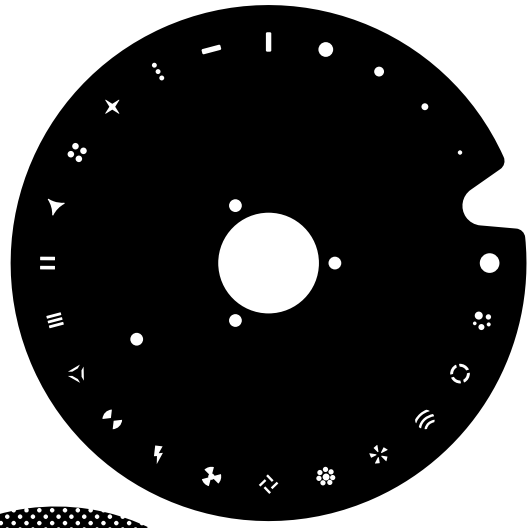

● **Animation**

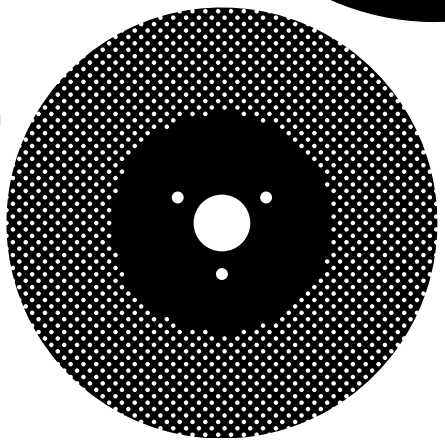

● **Prism system**

6 linear + 8 prism + 12 prism + 24prism

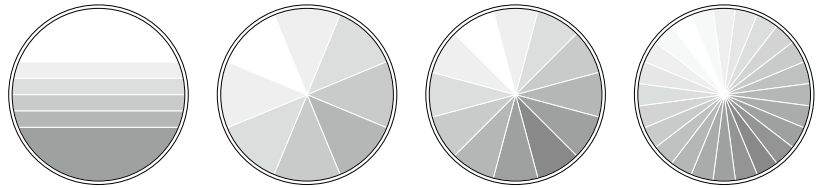

● **Pan/Tilt**

Pan scan:
Infinite rotation (360°)
Tilt scan:
270° 8-bit/16bit precision scanning

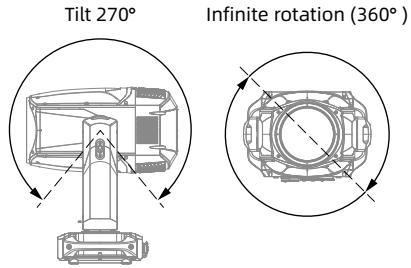

● **Optical system**

Beam angle: 0.9 ~ 17.3°
Spot angle: 2.3 ~ 25.5°
Wash angle: 3.7 ~ 38°
Source：500W Laser
Output luminous flux：23000 Lm

● **Control and programming**

Control channel：29CH/36CH
Protocol：DMX512, RDM, Art-net/sACH
Data connect：3 pin signal In/Out, RJ45 In/Out

● **Illumination draw**

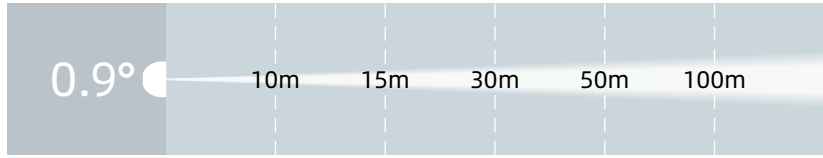

Lux	760000	370000	84500	30400	7600
Diameter (m)	0.16	0.24	0.47	0.79	1.57

www.ckclighting.com

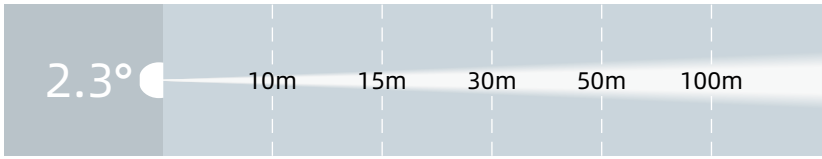

Lux	400000	150000	37300	13400	3360
Diameter (m)	0.40	0.60	1.20	2.01	4.01

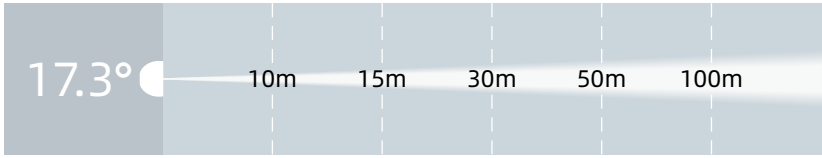

Lux	3864	1910	530	191
Diameter (m)	3.04	4.56	9.13	15.21

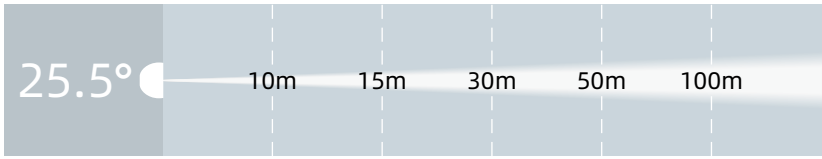

Lux	3180	1613	449	161
Diameter (m)	4.53	6.79	13.58	22.63

- **Other effect function**

Fast electronic strobe：1~25Hz　　Frost：heavy frost

- **Other features and functions**

Weight：33 KG (Integrated light hook version)　34.2 KG (Normal version)

4. Packaging and transportation

4.1 Disassemble packaging

Notice：After receiving the fixture, please unpack and check for any damage caused by transportation. If there is any damage caused by transportation, please do not use this fixture and contact the local technical personnel or manufacturer as soon as possible.

4.2 Equipment packaging

1). Disconnect the power supply before packaging the lighting fixtures to allow them to cool completely;
2). Flight cases can only be stacked in two layers and are not allowed to be reversed.

5. Installation Requirements Explanation

5.1 Clamp install

The lighting fixtures can be installed on the stage or on any direction of the truss, and the clamp can be quickly and easily locked onto the truss.

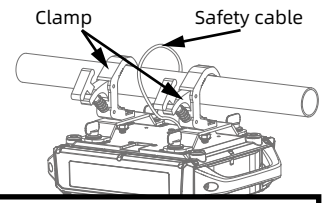

Waining !

The lighting fixtures are divided into two versions: integrated light hook and normal. When using the integrated light hook version, the clamp is broken up and locked onto the truss. The normal version must use 2 clamps to secure the device and fasten it with a 1/4 rotation. Regardless of the version, one safety rope must be added and connected to the base hole, but be careful not to connect it to the handling handle.

Quick lock and clamp install

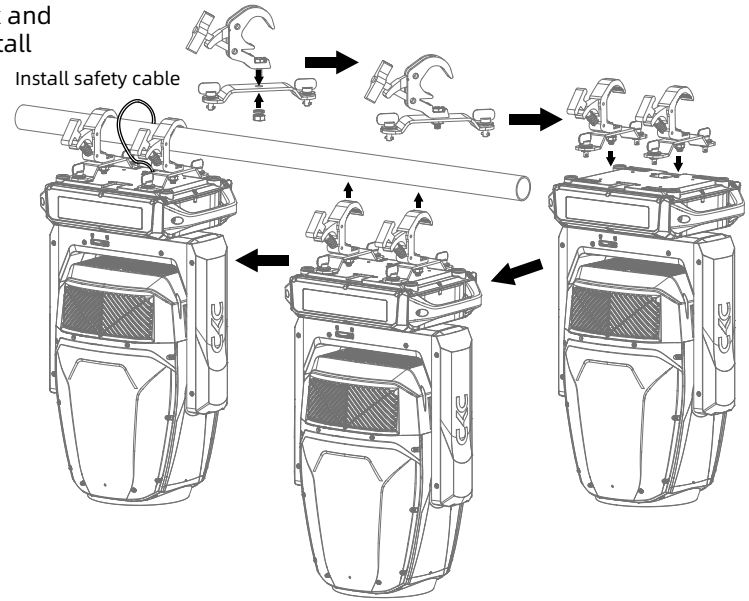

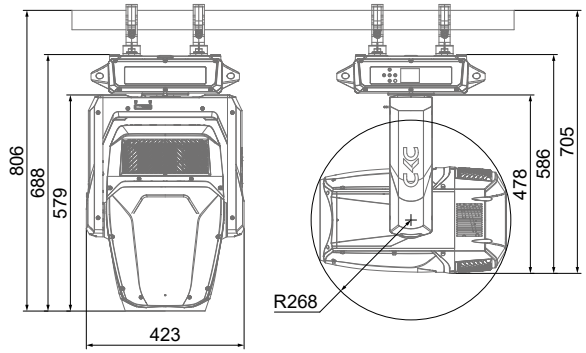

www.ckclighting.com

Integrated clamp installion

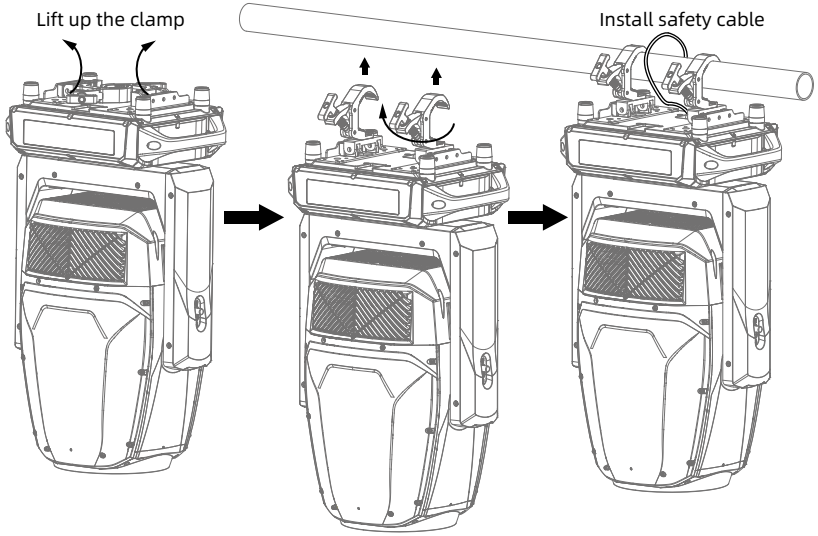

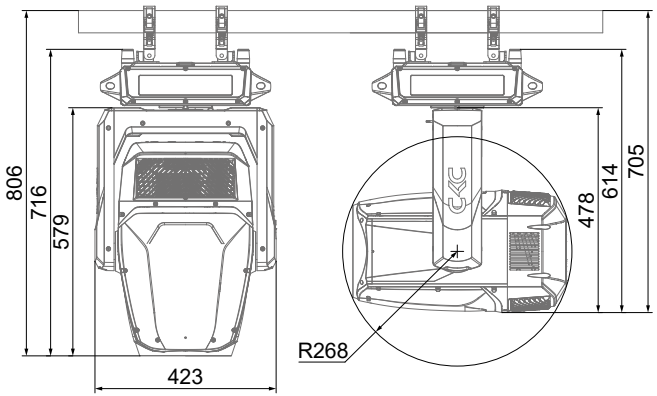

5.2 Equipment installation

1). Before installation, it is necessary to verify that the lamp hook and safety rope are not damaged, and that the installation object can withstand 6 times the total weight of the lamp and cable accessories;
2). Install the quick lock clamp on the base of the lamp body. Insert the clamp horizontally into the mounting hole of the base, rotate it clockwise 1/4 turn to lock it, and install the second clamp using the same method (the shape of the clamp should be based on the actual product).

5.3 Hanging Installation Diagram

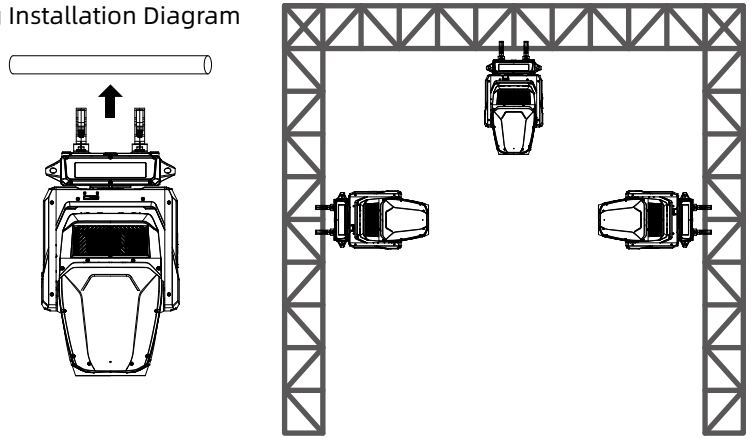

Reminder: External beam source may damage internal lighting fixtures

External beams from direct sunlight, lighting fixtures, and lasers that are directly focused onto the casing or penetrate the lens to illuminate the interior of the fixture may cause damage to the components. This is a common issue with all lighting fixtures and does not occur alone with CKC products. Although there is no way to completely prevent this problem from occurring, following the following guidelines can prevent potential damage.

When unpacking, installing, using, and stopping the operation of the lighting fixtures, please do not expose the transparency of the fixtures the mirror is exposed to direct sunlight, other lighting fixtures, or laser beams,Do not directly focus the beam of this device onto another lighting fixture.

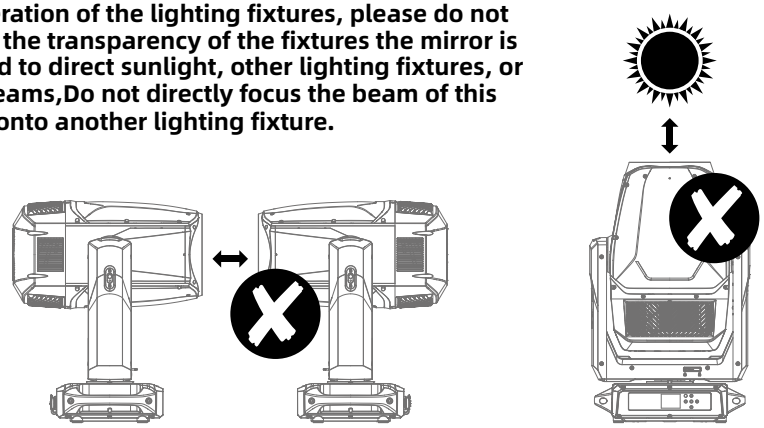

www.ckclighting.com

6. Power、Signal connect

6.1 Power and signal socket

1.Fuse holder 2.Power input
3.Power output 4.RJ45 out
5.RJ45 in 6.XLR female
7. XLR male 8. Breathable valve

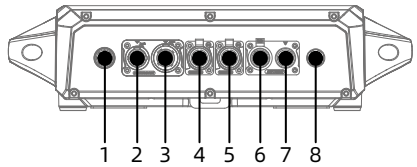

6.2 Power connect

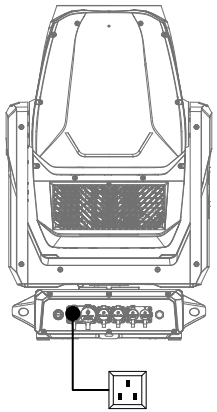

Connection method:

L(live wire) - brown wire

E(Ground wire) - yellow/green dual color line

N(Zero Line) - Blue Line

When connecting the power supply, please note that the voltage and frequency of the power supply must match the voltage and frequency marked on the light fixture. When multiple fixtures are used simultaneously, it is recommended to connect the power supply of each fixture separately, so that each fixture can be individually controlled for power on/off.

Attention: When connecting the power supply, the ground wire (yellow/green dual color wire) must be safely grounded and comply with all relevant electrical installation standards.

Power In

This product uses Powercon In/Out to connect power cords. Due to power limitations, a 2 square meter power cord can carry up to 5 products at 240V and 1 product at 100V.

Waining !

- Do not connect too many fixtures or overload a single power cord;
- Do not use power cords with damaged insulation layers, and do not place power cords on other wires;
- When the fixture is not in use or cleaned, please unplug the power cord; Do not forcefully unplug or drag the power cord directly.

6.3 Signal connect

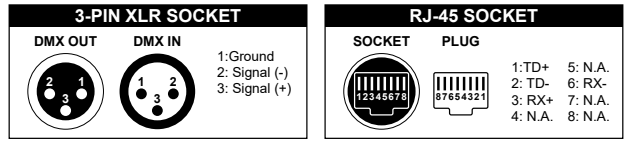

The lighting fixtures are equipped with standard DMX XLR and RJ-45 input and output sockets. Please use DMX512 shielded twisted pair signal cables or Category 5 or above network twisted pair cables for connection. The typical connection distance for DMX signal lines is 150 meters. When transmitting signals over long distances, a DMX512 signal amplifier must be added.

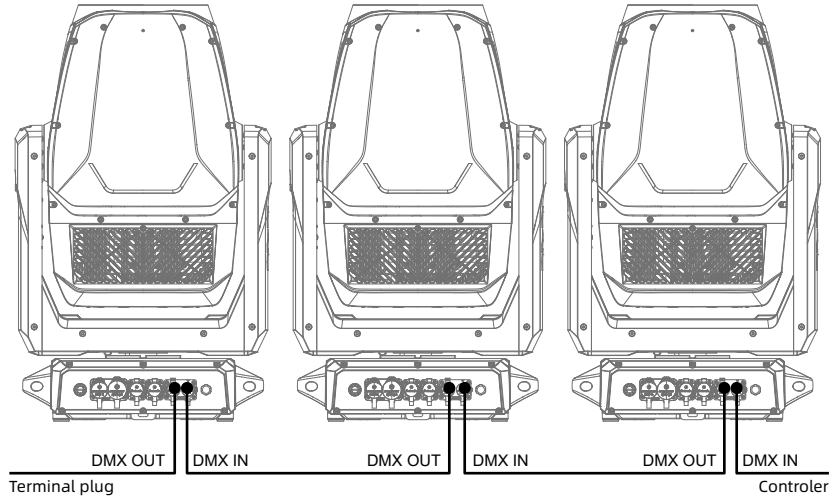

Connect a shielded twisted pair signal cable from the DMX output port of the controller to the DMX input port of the first device, and from the DMX output port of the first device to the DMX input port of the second device, and so on, until all the lamps are connected. Then install a terminal plug on the last 3 or 5 pin socket of each connected lamp output. (Weld a 4/1W, 120 Ω resistor between the 2 and 3 pins of a 3 or 5 core pin XLR plug).

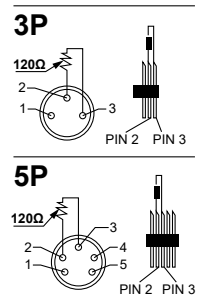

www.ckclighting.com

7. Control panel

7.1 Panel Introduction

- NFC: The lighting fixtures do not require power on and can be directly set up, diagnosed, and perform other functions through the CKC app;
- Adopts a 2.4-inch LCD display and a touch-sensitive keypad operation panel;
- Press the MODE key to view or modify the lighting function settings, and press the UP, DOWN, LEFT, and RIGHT keys to select the function menu;
- Press the ENTER key to confirm your selected function menu, which will take you to the corresponding sub menu in the menu. Each menu item represents a specific function of the lighting fixture (as shown in the table below);
- Press the ENTER key to save your modifications or enter a submenu, and press the UP or DOWN key to modify values (increase or decrease values); Press the MODE key to return to the previous menu or exit.
- Press the MODE key to return to the previous menu or exit.

7.2、System menu

Note: The gray color block is the default setting value

Software Update Please Wait... CKC Proxima HYBRID Ethernet Reset Temperature Check Fixture Type Check Motor Reset			
SET	Dmx Presets	A001~AXXX	
	User Mode	Standard Extend	
	Network	Net Protocol	ArtNET/sACH
	Status	No DMX Mode P.Reverse T.Reverse Pan Degree Feedback Move.Speed Hibernation Reset Mode	Black/Hold/Auto ON/OFF ON/OFF 630/540 ON/OFF Speed 1~ 4 OFF, 01M~99M，15M Fast Reset/Traditional
	Fixture ID	Service PIN Universe IP Address Mask Address	Password=XXX 000~255 2.XXX.XXX.XXX 255.XXX.XXX.XXX
Function	Net Switch	OFF/ON	
	Dim Mode	Standard Stage TV Architectural Theatre	
	Temp. C/F	Celsius Fahrenheit	
	Dim Curve	Linear Square Inv-Square S-Curve	
	Frequency	1200Hz/3600Hz/5000Hz/10KHz/15KHz/20KHz/25KHz	
	Fan Set	Head Fan	Auto High Low Silent
		Base Fan	Auto High Low Silent
	LCD.Set	Backlight Flip Display Key Lock DispFlash Language	01~60m OFF/ON OFF/ON OFF/ON English/Chinese
	Disp.Set	Channel Value Slave Set Auto.Prog	PAN..... Slave1,Slave2,Slave3 Master / Alone
	DFSE	OFF/ON	
	Scan Record	-Service PIN-(password:050) Record Status No Record/Pan Record/Tilt Record/ All Record	
Test	Reset.M	All Pan&Tilt Other	
	Test.Chan	PAN	
	Panel.Ctrl.	PAN =XXX :	
	Calibr-ate	-Password- PAN :	
	Time.Info	Current Total Time Last Time Timer PIN Clear Last	

www.ckclighting.com

Info	Temp. Info	LED Temp Head Temp Base Temp. Head Hum: Base Hum
	Fan Speed	Base Fan1:xxxx RPM Base Fan2: xxxx RPM Cool Fan1: xxxx RPM .....
	Error. Info	Pan,Tilt.....
	Model. Info	Proxima HYBRID
	Softw- are. V	1U V 1.0.X 2U V 1.0.X 3U V 1.0.X :

8. DMX channel table:

ST.	EX.	Values	Function
1	1	0~255	**PAN Movement 8it:** Pan Movement By 630/540
2	2	0~255	**Pan Fine 16bt:** Fine control of Pan movement
3	3	0~255	**TILT Movement 8bi:** Tilt Movement
4	4	0~255	**Tilt Fine 16bit** Tilt Fine
5	5		**PAN Continuous Rotation:**
		0~127	No function
		128~189	Pan clockwise from fast to slow
		190~193	Stop
		194~255	Pan counter-clockwise from slow to fast
6	6	0~255	**Dimmer (intensity):** Intensity 0 to 100%
7	7	0~255	**Dimmer Fine 16-bit:** Intensity 0 to 100%
8	8		**Shutter, Strobe:**
		0~31	No function (shutter closed)
		32~63	Shutter open
		64~95	Strobe slow to fast
		96~127	Shutter open
		128~159	Slow to fast pulse effect
		160~191	Shutter open
		192~223	Slow to fast random strobe
		224~255	Shutter open
9	9	0~255	**Cyan:** Cyan (0-100%)
	10	0~255	**Cyan Fine:** Cyan Fine
10	11	0~255	**Magenta:** Magenta (0-100%)
	12	0~255	**Magenta Fine:** Magenta Fine
11	13	0~255	**Yellow:** Yellow (0-100%)
	14	0~255	**Yellow Fine:** Yellow Fine
12	15		**Color Wheel :**
		000~005	Colour off (open)
		006~118	Open → Color17..Color17 → Open
		119~120	Open
		121~124	Color 1
		125~128	Color 2
		129~132	Color 3
		133~136	Color 4
		137~140	Color 5
		141~144	Color 6
		145~148	Color 7
		149~152	Color 8
		153~156	Color 9
		157~160	Color 10
		161~164	Color 11
		165~168	Color 12
		169~172	Color 13
		173~176	Color 14
		177~180	Color 15
		181~184	Color 16
		185~188	Color 17
		189~192	Colour off (open)
		193~223	Clockwise from fast to slow
		224~224	Stop
		225~255	Counter-clockwise from slow to fast
13	16	0~255	**Colour Wheel Fine:** 0% to 100%
			Rotanting Gobos:
		000~002	Beam Mode
		003~005	Spot Mode
		006~010	Gobo 1
		011~015	Gobo 2

www.ckclighting.com

14	17	016~020	Gobo 3
		021~025	Gobo 4
		026~030	Gobo 5
		031~035	Gobo 6
		036~040	Gobo 7
		041~045	Gobo 8
		046~050	Gobo 9
		051~055	Gobo 10
		056~060	Gobo 11
		061~065	Gobo 12
		066~075	Gobo 1 shake (slow-fast)
		076~085	Gobo 2 shake (slow-fast)
		086~095	Gobo 3 shake (slow-fast)
		096~105	Gobo 4 shake (slow-fast)
		106~115	Gobo 5 shake (slow-fast)
		116~125	Gobo 6 shake (slow-fast)
		126~135	Gobo 7 shake (slow-fast)
		136~145	Gobo 8 shake (slow-fast)
		146~155	Gobo 9 shake (slow-fast)
		156~165	Gobo 10 shake (slow-fast)
		166~175	Gobo 11 shake (slow-fast)
		176~185	Gobo 12 shake (slow-fast)
		186~192	Open
		193~222	Clockwise from fast to slow
		223~225	Stop
		226~255	Counter-clockwise from slow to fast
15	18		**Rotanting Gobo Index:**
		0~5	Gobo1 Rot. Off
		6~128	Gobo Index 0° ... 540°
		129~191	Clockwise Gobo Rotation, Fast -> Slow
		192~192	No Rotation
		193~255	Counter Clockwise Gobo Rotation, Slow -> Fast
16	19	0~255	**Rotanting Gobo Index fine:** 0% to 100%
			Fixed Gobos:
		000~005	Open
		006~010	Gobo 1
		011~014	Gobo 2
		015~018	Gobo 3
		019~022	Gobo 4
		023~026	Gobo 5
		027~030	Gobo 6
		031~034	Gobo 7

17	20	035~038	Gobo 8
		039~042	Gobo 9
		043~046	Gobo 10
		047~050	Gobo 11
		051~054	Gobo 12
		055~058	Gobo 13
		059~062	Gobo 14
		063~066	Gobo 15
		067~070	Gobo 16
		071~074	Gobo 17
		075~078	Gobo 18
		079~082	Gobo 19
		083~086	Gobo 20
		087~090	Gobo 21
		091~094	Gobo 22
		095~098	Gobo 23
		099~102	Gobo 1 shake, from slow to fast
		103~106	Gobo 2 shake, from slow to fast
		107~110	Gobo 3 shake, from slow to fast
		111~114	Gobo 4 shake, from slow to fast
		115~118	Gobo 5 shake, from slow to fast
		119~122	Gobo 6 shake, from slow to fast
		123~126	Gobo 7 shake, from slow to fast
		127~130	Gobo 8 shake, from slow to fast
		131~134	Gobo 9 shake, from slow to fast
		135~138	Gobo 10 shake, from slow to fast
		139~142	Gobo 11 shake, from slow to fast
		143~146	Gobo 12 shake, from slow to fast
		147~150	Gobo 13 shake, from slow to fast
		151~154	Gobo 14 shake, from slow to fast
		155~158	Gobo 15 shake, from slow to fast
		159~162	Gobo 16 shake, from slow to fast
		163~166	Gobo 17 shake, from slow to fast
		167~170	Gobo 18 shake, from slow to fast
		171~174	Gobo 19 shake, from slow to fast
		175~178	Gobo 20 shake, from slow to fast
		179~182	Gobo 21 shake, from slow to fast
		183~186	Gobo 22 shake, from slow to fast
		187~190	Gobo 23 shake, from slow to fast
		191~195	Open
		196~224	Clockwise from fast to slow
		225~226	Stop
		227~255	Counter-clockwise from slow to fast

www.ckclighting.com

18	21	0~255	**Zoom:** Narrow to wide
19	22	0~255	**Zoom Fine:** Narrow to wide 16-bit
20	23	0~255	**Focus:** Continuous adjustment from far to near
21	24	0~255	**Focus Fine:** Continuous adjustment from far to near fine
22	25		**Prism 1:**
		0~5	No Prism
		6~255	6 Linear Prism
23	26		**Prism 1 Indexing and Rotation:**
		0~5	Prism1 Rot. Off
		6~128	Prism1 Position 0 ... 540°
		129~191	Prism1 Rotation,Fast -> Slow , CW
		192~192	Prism1 Rotation Stop
		193~255	Prism1 Rotation, Slow -> Fast, CCW
	27	0~255	**Prism 1 Indexing Fine (16-bit):** 0% to 100%
24	28		**Prism Wheel 2:**
		000~005	No function
		006~085	8 face Prism
		086~165	12 face Prism
		166~255	24 face Prism
25	29		**Prism Wheel 2 Indexing and Rotation:**
		0~5	Prism1 Rot. Off
		6~128	Prism1 Position 0 ... 540°
		129~191	Prism1 Rotation,Fast -> Slow , CW
		192~192	Prism1 Rotation Stop
		193~255	Prism1 Rotation, Slow -> Fast, CCW
	30	0~255	**Prism Wheel 2 Indexing Fine (16-bit):** 0% to 100%
26	31	0~255	Frost
27	32		**Animation:**
		000~005	Wheel Rot. Off
		006~128	Wheel Position 0 ... 540°
		129~191	Wheel rot. Fast -> Slow, CW
		192~192	Wheel rot. Stop
		193~255	Wheel rot. Slow -> Fast, CCW
	33	0~255	**Animation Fine:** 0% to 100%
	34	0~255	**Pan/Tilt Speed:** Max to min speed

28	35		**Dim Modes:**
		000~020	Standard
		021~040	Stage
		041~060	TV
		061~080	Architectural
		081~100	Theatre
		101~255	No Function
29	36		**Device settings:**
		000~005	No function
		006~010	OFF Display Backlight(Hold 3s)
		011~015	ON Display Backlight(Hold 3s)
		016~020	Invert Pan on (Hold 3s)
		021~025	Invert Pan off (Hold 3s)
		026~030	Invert Tilt on (Hold 3s)
		031~035	Invert Tilt off (Hold 3s)
		036~038	Fan Auto (Hold 3s)
		039~041	Fan High (Hold 3s)
		042~044	Fan Low (Hold 3s)
		045~047	Fan Silent (Hold 3s)
		048~050	No function
		051~055	Linear Dimmer Curve (hold 3s)
		056~060	Square Dimmer Curve (hold 3s)
		061~065	Inv-Square Dimmer Curve (hold 3s)
		066~070	S - Dimmer Curve (hold 3s)
		071~075	Led Freq. 1200 Hz (hold 3s)
		076~080	Led Freq. 3600 Hz (hold 3s)
		081~085	Led Freq. 5000 Hz (hold 3s)
		086~090	Led Freq. 10.000 Hz (hold 3s)
		091~095	Led Freq. 15.000 Hz (hold 3s)
		096~100	Led Freq. 20.000 Hz (hold 3s)
		101~105	Led Freq. 25.000 Hz (hold 3s)
		106~110	Reset Pan/Tilt (Hold 3s)
		111~115	Reset only Head (Hold 3s)
		116~120	Reset All Functions (Hold 3s)
		121~130	No function
		131~135	Fast Reset
		136~140	Tradition Reset
		141~155	No function
		156~160	Factory Default(Hold 3s)
		161~255	No function

www.ckclighting.com

9. Control circuit diagram

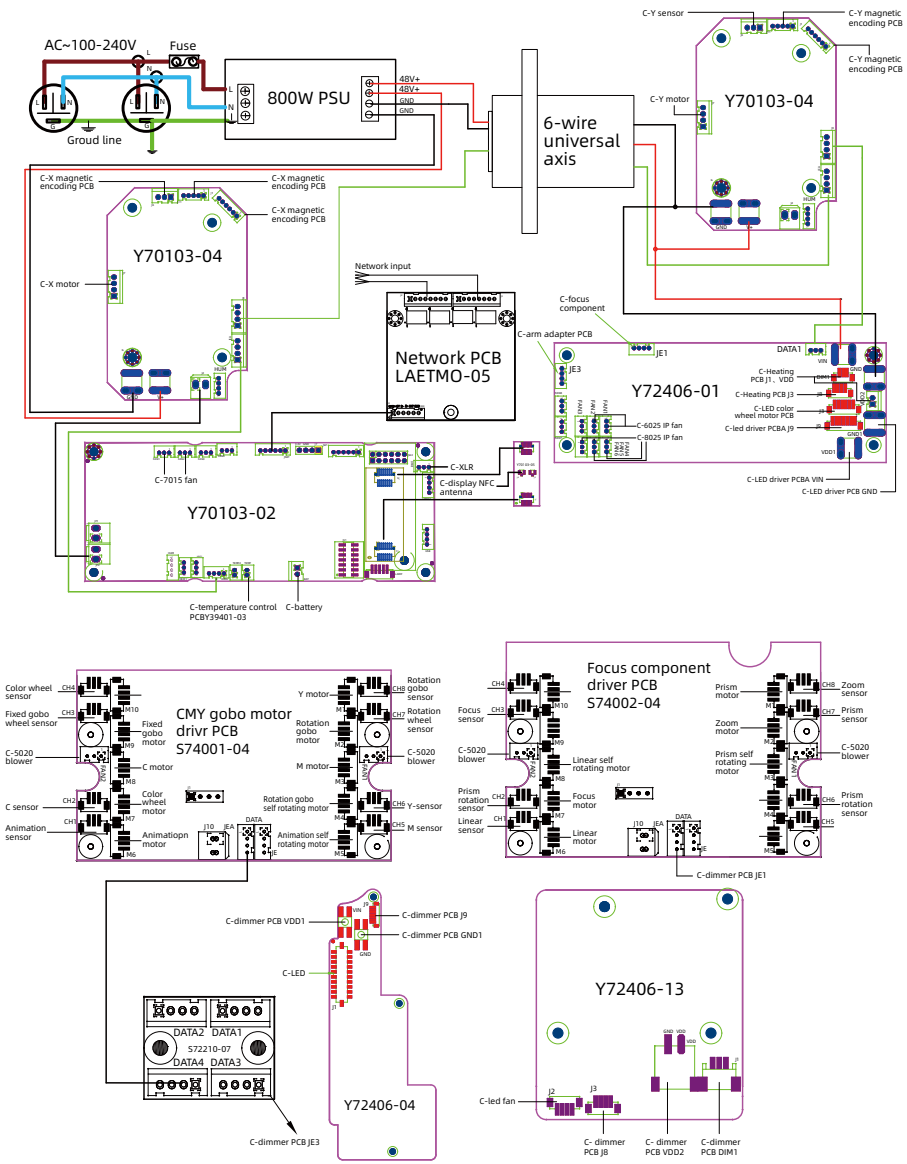

10. Regular maintenance

10.1 Cleaning and maintenance

Lighting fixtures require daily cleaning and maintenance, and their service life largely depends on the operating environment and standards. If you have any questions, please consult our technical engineers for advice. Maintenance and repair work not included in this book should be entrusted to our qualified technical engineers.

Attention! Damage caused by dust, e-liquid, or other reasons, as well as abnormal use, is not covered by the warranty.

Waining !

Before opening any lid, disconnect the power supply. Cleaning optical components requires gentle wiping as the coating surface is prone to scratching. Do not use damaging liquids or hard objects , as they may damage the plastic or coating surface.

- When the lens is cracked or otherwise damaged, it should be replaced in a timely manner;
- When the brightness significantly decreases, the LED may have reached its expiration date and should be replaced in a timely manner;
- When the fixture cannot start, please check if the fixture power fuse is blown. If it is blown, a fuse of the same specification must be used for installation;
- The fixture is equipped with a temperature protection device. When the temperature is too high, the protection device will automatically reduce power.
- When this situation occurs, please check whether the fan is running normally, whether the fan and fan mesh are clogged with dust, identify the fault and repair it before starting the fixture. Please note that only qualified technicians are allowed to carry out maintenance work;
- To maintain smooth movement of the focusing lens, it is recommended to lubricate the guide rail of the focusing lens every three months. Excellent and high-temperature resistant lubricating grease should be used, and excessive grease should not be used as it can easily dirty adjacent components.

10.2 Fault analysis and handling

Fault description	Analysis	Processing method
No action after power on	Check if the power switch is turned on	Turn on
	Check if the fuse is blown	Replace
	Check if the output of PSU is normal	Detecting voltage
	Check if poor contact in the internal circuit	Reconnect

www.ckclighting.com

Uncontrolled lighting fixtures	Check if the DMX signal cable is connected correctly (If there is no signal, the display screen will flash)	Reconnect or replace
	Check if the address code is correct and if the DMX mode of the lighting fixture matches the settings	Reconfirm
	The main control PCB is damaged	Replace
Not bright	LED aging or damage	Replace
	Power PCB malfunction	Check/ Replace
	Loose or poor contact of the circuit	Reconnect
	PSU malfunction	Replace
Automatically turn off or dim the lights	LED aging	Replace
	Damaged cooling fan or abnormal wind speed	Replace
	Check the power output of the fan	Check/ Replace
	The temperature control switch is damaged	Replace
Gobo wheel misalignment or abnormal control	Poor contact of motor wire	Reconnect
	Corresponding motor drive board malfunction	Refixed
	Misalignment or magnetic damage between the magnetic tube and the positioning magnet	Adjust/Replace
	Motor malfunction	Replace
Weak light efficiency and uneven light spot	LED aging	Replace
	LED not centered with the lens	Adjust LED
	The optical mirror has accumulated dust or stains	Clean
	The optical mirror is damaged	Replace
Impure color	Weakening of light efficiency	Replace led PCB
	The color filter has accumulated dust or stains	Clean
	The color filter has been demolded or damaged	Replace

Gobo is unclear	The optical mirror has accumulated dust or stains	Clean
	The optical mirror is damaged	Replace
Head or base fan stops rotating	Check if the fan leads are installed properly or disconnected	Re connect
	Check if the fan is damaged	Replace
	Check if there are any other interfering objects within the operating range of the fan	Adjust
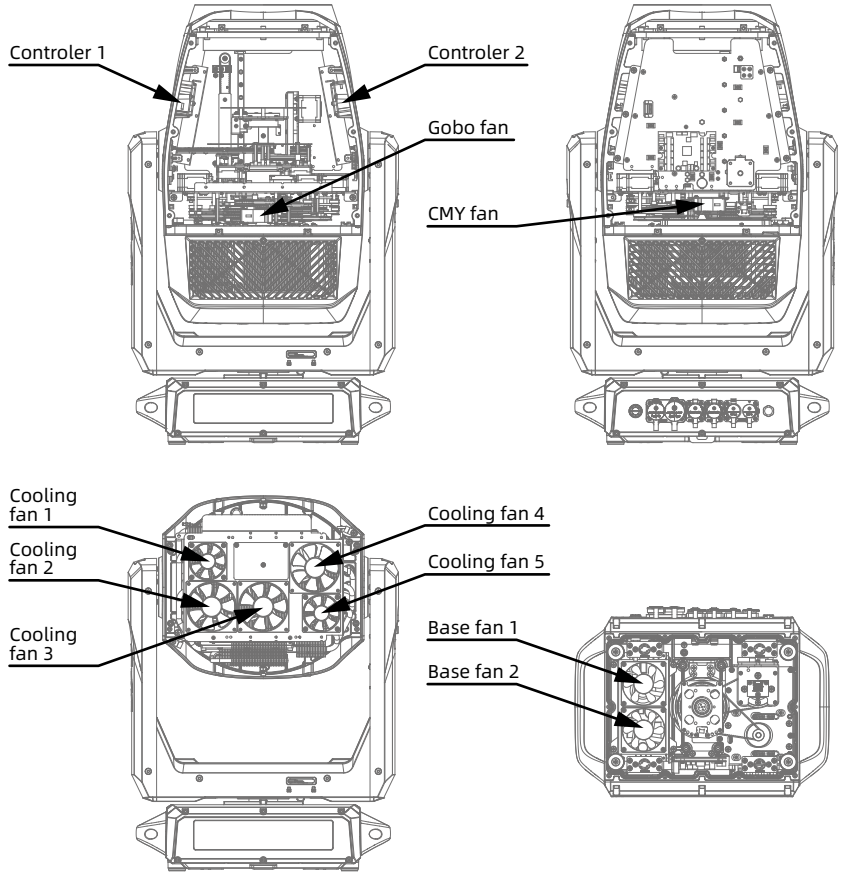
Attention! The above analysis is for abnormal reference only. Non professionals are not allowed to disassemble and repair the machine