EvoWash air

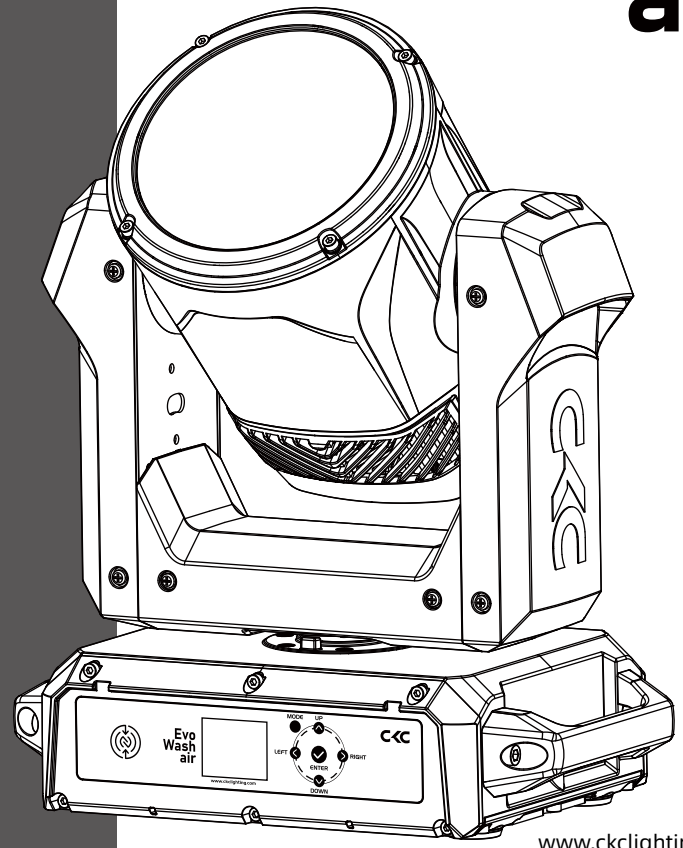

www.ckclighting.com

Before carrying out any installation, maintenance, or cleaning of the lighting fixtures, please confirm that the power has been cut off! Before using this fixture, please read this manual. Our company reserves the right to change product design and specifications without prior notice.

CKC LIGHTING CO.,LTD

Addr.:335 Nansha Avenue, Tung Chung Town,
Nansha District, Guangzhou City, China.
TEL：(020)3920 4506 FAX：(020)3920 4631
WEB：www.ckclighting.com

CONTENTS

1. Security Warning Information 1

2. Product Introduction 3

2.1 Dimensional drawings 3
2.2 Fixture packaging accessories 3

3. Main technical parameters of the equipment 3

4. Packaging and transportation 4

4.1 Disassemble packaging 4
4.2 Equipment installation 5

5. Installation Requirements Explanation 5

5.1 Clamp installation 5
5.2 Fixture installtion 6
5.3 Hanging Installation Diagram 6

6. Power and signal connection 7

6.1 Power and signal socket 7
6.2 Power Connect 7
6.3 Signal Connect 8

7. Control panel 9

7.1 Panel Introduction 9
7.2 System menu 9

8. DMX control channel table 12

9. Control circuit diagram 18

10. Regular maintenance 18

10.1 Cleaning and maintenance 18
10.2 Fault analysis and handling 19

www.ckclighting.com

★ Statement ★

- This manual contains important information on safe use and installation. Please read it carefully and follow the requirements for operation and installation. Please keep this manual properly;
- The equipment has good performance and complete packaging when it leaves the factory. The operator should strictly follow the warning items and operating instructions stated in the manual. Any malfunction or damage caused by misuse or neglect of the manual is not within the scope of our company's responsibility and warranty;
- The relevant information in this manual is for reference only. All lighting products are subject to the actual product. Any changes will not be notified separately, and our company reserves the right of final interpretation.

1. Security Warning Information

Attention !

Please read the safety requirements information in this section carefully before installing, powering on, operating, or repairing the lighting fixtures.

- This product is for professional use and is not suitable for other purposes;
- After receiving the lighting fixtures, please check if the packaging is complete and unpack to check if the equipment has been damaged due to transportation. If there is any damage caused by transportation, please do not use this lamp and contact local technicians or manufacturers as soon as possible;
- When transporting again, please use the original packaging materials;
- If there is obvious damage to the machine casing, it should be replaced in a timely manner;
- When hanging lamps, it is necessary to verify that the hanging equipment can withstand more than 6 times the weight of the lamp. After installation, it is necessary to verify that the lamp cover and installation buckle are secure and undamaged. At the same time, a safety rope should be used as an auxiliary safety for the lamp and fixed on the truss;
- The light source inside this luminaire should be replaced by the manufacturer, its service agent, or a similarly qualified person;
- If you have any other questions about how to safely operate the equipment, please contact our technical personnel or call our service hotline;
- This product has a protection level of IP66 and can be used both indoors and outdoors;
- Avoid direct external strong light shining on the lens, which may cause the lens to focus and burn out internal components;
- Before turning off the lighting fixture, please adjust the zoom lens to the maximum angle (DMX value: 255), such as the position closest to the LED.

- Lighting fixtures should be kept clean and avoid prolonged use in overheated or dusty environments to prevent contact with chemical liquids;
- When using the product, attention should be paid to avoiding serious or fatal injuries caused by fire, heat, electrical shock, and ultraviolet radiation. Before powering on or installing, read the instruction manual first. Follow the safety precautions for operation and pay attention to the warning signs on the instructions and equipment;
- Only professionals are allowed to install, operate, and maintain lighting fixtures, and strictly follow the procedures stated in the operating instructions.

- The eyes cannot directly look at the luminous object;
- Do not connect this device to any dimmer;
- If visible damage occurs to the protective casing, lens, and display screen on the lighting fixture, it is considered as damage to the point of loss;
- Please do not place any filters or other items at the light outlet, and do not replace non original parts;
- The minimum safe illumination distance of the lamp is 1m.

- Before installation, please confirm that the power supply voltage used matches the voltage indicated on the light fixture. Each lighting fixture should be properly grounded and electrically installed according to relevant standards;
- Please disconnect the power before repairing or cleaning the equipment;
- During the operation of the lighting fixtures, touching the wires is prohibited to prevent electric shock;
- If the external soft cable or wire of this lamp is damaged, the wire should be replaced by the manufacturer, its agent, or a similarly qualified person to avoid danger;
- Avoid flammable liquids, water, or metal conductors from entering the interior of the lamp to prevent electric shock or fire. If any foreign objects enter the lamp, immediately cut off the power supply;
- When multiple lamps are operated in series, the signal lines can be connected in multiple ways, but the power supply must be connected separately.

- The lighting fixtures work normally at -40 ℃ to 45 ℃ . When replacing any components or accessories in the equipment, ensure that the power is disconnected to prevent electric shock and injury;
- The maximum surface temperature of the lamp during operation can reach 60 ℃ , please do not touch it with bare hands.

- The lighting fixtures must be installed in a sufficiently ventilated area, at least 0.5m away from adjacent surfaces, to ensure that no ventilation holes are blocked;
- Do not install the lighting fixtures directly on flammable objects;
- The minimum distance between all outer surfaces of the lamp and combustible materials is 0.5m.

www.ckclighting.com

2. Product Introduction

2.1 Dimensional drawings

298 × 205 × 362 mm

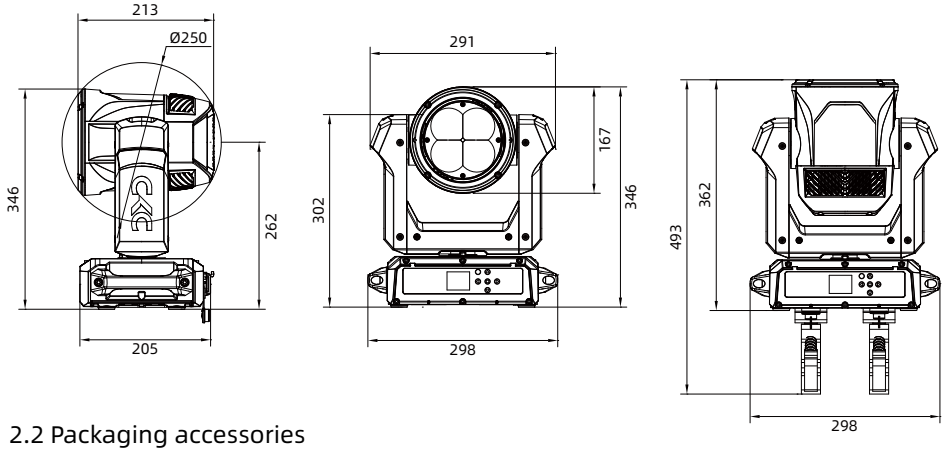

2.2 Packaging accessories

Name	QTY	
Omega bracket	2	PCS
Clamp	2	PCS
Safety cable	1	PCS

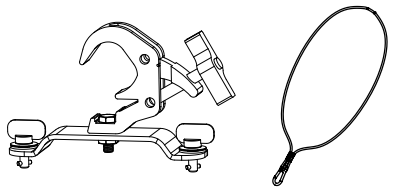

3. Main technical parameters of the equipment

Product execution standards：GB43472-2023、GB/T7000.1-2023、GB/T7000.217-2023

● Electrical parameter

Rated input voltage：AC 100V-240V~ 50Hz/60Hz
Power：320W@220V；330W@100V
Power factor：0.99F
Input Current：220V 1.5A

● LED lifespan

> 20000 hours

● Pan/Tilt

Pan：infinite rotation (360°)
Tilt：infinite rotation (360°)

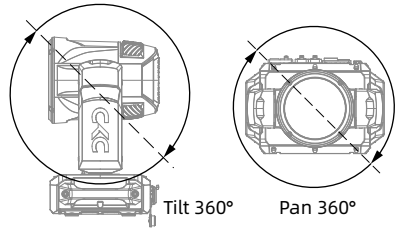

● Optical system

LED source: 4 × 60W RGBL LED
Output luminous flux：4900 Lm
Zoom Range：4° ~ 55°
CCT：2400 ~ 8500K

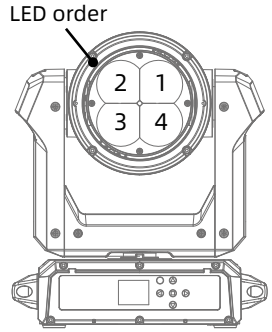

● Control and programming

Control channel：21CH/25CH/37CH
Protocol：DMX512，ArtNet/sACN，RDM
Data connect：3 or 5 pin XLR in/out，RJ45

● Illumination map

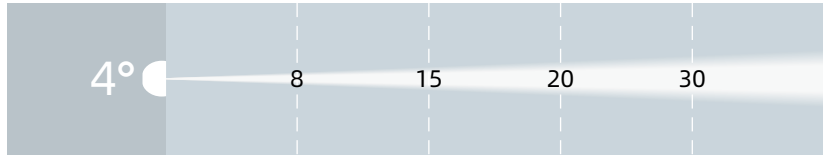

Lux	4531	1289	725	322
Diameter (m)	0.56	1.05	1.40	2.10

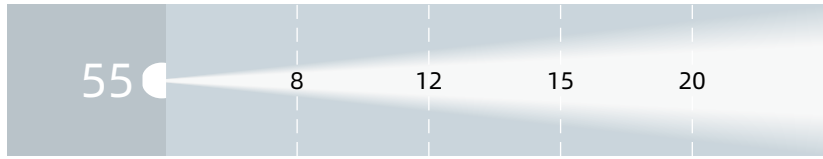

Lux	169	48	27
Diameter (m)	8.33	15.62	20.82

● Other effect function

Fast electronic strobe：1~25Hz

● Other features and functions

Weight：8.6 kg

4. Packaging and transportation

4.1 Disassemble packaging

Notice：After receiving the fixture, please unpack and check for any damage caused by transportation. If there is any damage caused by transportation, please do not use this fixture and contact the local technical personnel or manufacturer as soon as possible.

www.ckclighting.com

4.2 Equipment packaging

1). Disconnect the power supply before packaging the lighting fixtures to allow them to cool completely;
2). Flight cases can only be stacked in two layers and are not allowed to be reversed.

5. Installation Requirements Explanation

5.1 Clamp install

The lighting fixtures can be installed on the stage or on any direction of the truss, and the clamp can be quickly and easily locked onto

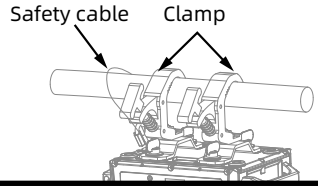

Waining !

The lighting fixtures are divided into two versions: integrated light hook and normal. When using the integrated light hook version, the clamp is broken up and locked onto the truss. The normal version must use 2 clamps to secure the device and fasten it with a 1/4 rotation. Regardless of the version, one safety rope must be added and connected to the base hole, but be careful not to connect it to the handling handle.

Quick lock and clamp install

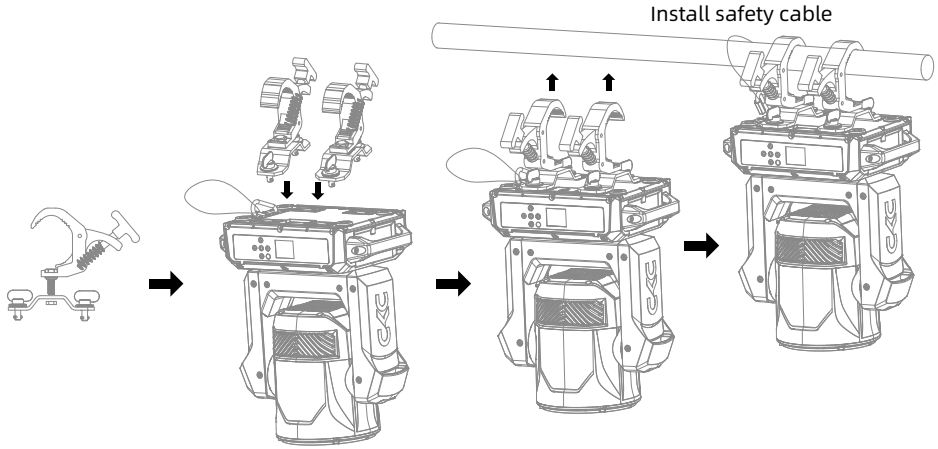

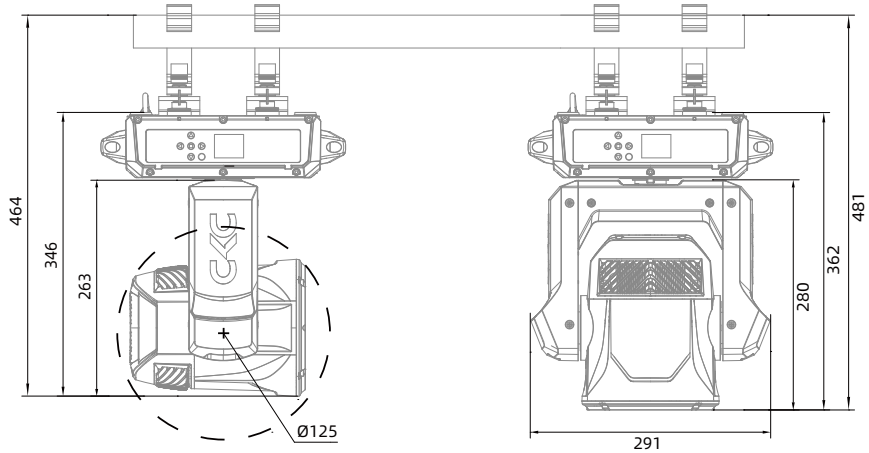

5.2 Equipment installation

1). Before installation, it is necessary to verify that the lamp hook and safety rope are not damaged, and that the installation object can withstand 6 times the total weight of the lamp and cable accessories;
2). Install the quick lock clamp on the base of the lamp body. Insert the clamp horizontally into the mounting hole of the base, rotate it clockwise 1/4 turn to lock it, and install the second clamp using the same method (the shape of the clamp should be based on the actual product).

5.3 Hanging Installation Diagram

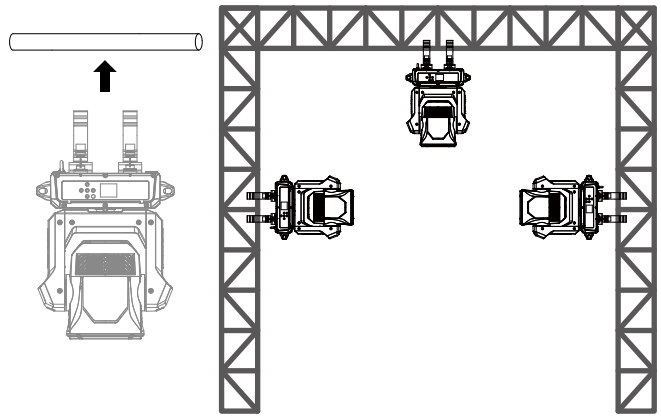

Reminder: External beam source may damage internal lighting fixtures

External beams from direct sunlight, lighting fixtures, and lasers that are directly focused onto the casing or penetrate the lens to illuminate the interior of the fixture may cause damage to the components. This is a common issue with all lighting fixtures and does not occur alone with CKC products. Although there is no way to completely prevent this problem from occurring, following the following guidelines can prevent potential damage.

When unpacking, installing, using, and stopping the operation of the lighting fixtures, please do not expose the transparency of the fixtures the mirror is exposed to direct sunlight, other lighting fixtures, or laser beams,Do not directly focus the beam of this device onto another lighting fixture.

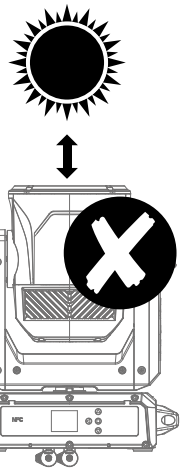

6. Power、Signal connect

6.1 Power and signal seat

1、Fuse holder　　2、Breathable valve
3、Power input　　4、Power output
5、Network output socket
6、Network input socket
7、DMX OUT　　8、DMX IN

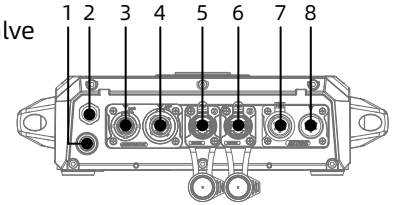

6.2 Power connect

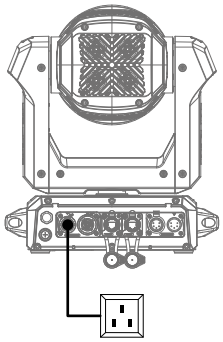

Connection method:

L(live wire) - brown wire

E(Ground wire) - yellow/green dual color line

N(Zero Line) - Blue Line

When connecting the power supply, please note that the voltage and frequency of the power supply must match the voltage and frequency marked on the light fixture. When multiple fixtures are used simultaneously, it is recommended to connect the power supply of each fixture separately, so that each fixture can be individually controlled for power on/off.

Attention: When connecting the power supply, the ground wire (yellow/green dual color wire) must be safely grounded and comply with all relevant electrical installation standards.

This product uses Powercon In/Out to connect power cords. Due to power limitations, a 2 square meter power cord can carry up to 8 products at 240V and 2 product at 100V.

Waining !

- Do not connect too many fixtures or overload a single power cord;
- Do not use power cords with damaged insulation layers, and do not place power cords on other wires;
- When the fixture is not in use or cleaned, please unplug the power cord; Do not forcefully unplug or drag the power cord directly.

6.3 Signal connect

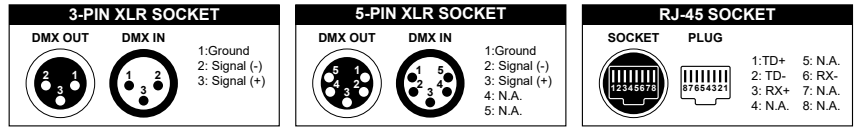

The lighting fixtures are equipped with standard DMX XLR or RJ-45 input and output sockets. Please use DMX512 shielded twisted pair signal cables or Category 5 or above network twisted pair cables for connection. The typical connection distance for DMX signal lines is 150 meters. When transmitting signals over long distances, a DMX512 signal amplifier must be added.

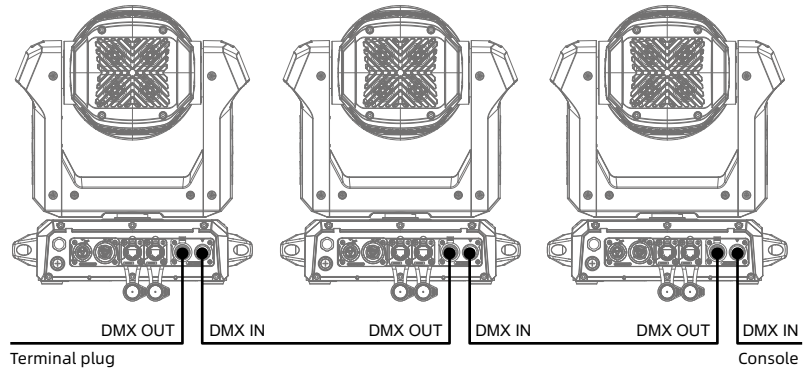

www.ckclighting.com

Connect a shielded twisted pair signal cable from the DMX output port of the controller to the DMX input port of the first device, and from the DMX output port of the first device to the DMX input port of the second device, and so on, until all the lamps are connected. Then install a terminal plug on the last 3 or 5 pin socket of each connected lamp output. (Weld a 4/1W, 120 Ω resistor between the 2 and 3 pins of a 3 or 5 core pin XLR plug).

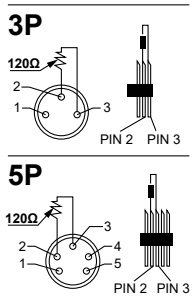

7. Control panel

7.1 Panel Introduction

- Adopts a 1.8-inch LCD display and a touch-sensitive keypad operation panel;
- NFC: The lighting fixtures do not require power on and can be directly set up, diagnosed, and perform other functions through the CKC app
- Press the MODE key to view or modify the lighting function settings, and press the UP, DOWN, LEFT, and RIGHT keys to select the function menu;
- Press the ENTER key to confirm your selected function menu, which will take you to the corresponding sub menu in the menu. Each menu item represents a specific function of the lighting fixture (as shown in the table below);
- Press the ENTER key to save your modifications or enter a submenu, and press the UP or DOWN key to modify values (increase or decrease values); Press the MODE key to return to the previous menu or exit.
- Press the MODE key to return to the previous menu or exit.

7.2、System menu

Note: The gray color block is the default setting value

Software Update Please Wait.. CKC EvoWash Air Ethernet Reset Temperature Check LED Temp:xxxC/F Head Temp:xxxC/F Base Temp：xxxC/F Motor Reset... Please Wait...

DMX	DMX Address	001 - 512	
	DMX Mode	Basic 21 Standard 25 Pixels 37	
	No DMX Status	Hold Last Fade to Black Sun Protection	
	Protocol	Select Signal	Art-Net / sACN
		Universe	0-32767(Default = 1)
		IP Address	Manual：2.x.x.x Unique Static: 2.x.x.x/ 10.x.x.x/ 172.x.x.x/ 192.x.x.x
		Subnet Mask	255.0.0.0
		Ethernet DMX Out	Off/On
		Netwrok Switch	Off/On
Control	Manual Control	Pan Pan Fine Tilt Tilt Fine ...	
	Reset	All Pan Tilt Zoom	
	Self Test	All Dimmer Movement Color Mix Zoom	
Settings	Fan Mode	Studio/Low/High/Auto	
	Movement	Pan Invert	Off/On
		Tilt Invert	Off/On
		Pan Degree	360/540
		Tilt Degree	360/270
		PanTilt Path	Shortest Path / Continue Path
		Pan /Tilt Speed	Smooth/Fast
		Pan/Tilt Feedback	Off/On
	Dim Curves	Linear Square Square Inverse S-Curve	

www.ckclighting.com

	Color Tuning	Highest CRI	
		Highest Output	
	Output Balance	Bright	
		Uniform	
	CCT Mode	Constant Mode	
		Max Mode	
	Dim Modes	Standard Stage TV Architectural Theatre	
	LED Refresh Rate	1200Hz, 3600Hz, 5000Hz, 10KHz,15KHz, 20KHz, 25KHz(Default = 1200Hz)	
	LED Power Limit	50% 60% 70% 80% 90% 100%	
	Display	Screen Delay	10s - 5min (1 min)
		Screen Lock	Off/ON/ON1
		FlipDisplay	Off/On/Auto
	Reset Defaults	Yes / No	
Info	Time	Current Time	xxxxxx H
		Total Run Time	xxxxxx H
		Last Run Time	xxxxxx H
		LED Time	xxxxxx H
	Temperature	LED	xxxC/xxxF
		Head	xxxC/xxxF
		Base	xxxC/xxxF
	Humidity	Head	xxx%
		Base	xxx%
	Fan	Fan： xxxxRPM	
	DMX Values	Pan Tilt ...	
	Product IDs	RDM UID	062B 0380 XXXX
	Error Logs	Fixture Errors	

	Software Version	1U:V1.X.X 2U:V1.X.X 3U:V1.X.X 4U:V1.X.X 5U:V1.X.X
Service (Passcode 50)	Calibration	Pan Tilt ...
	Reset Last Run	Yes / No
	Reset Error Logs	Yes / No
	CCT MODE (Passcode 251)	Overheating mode
	Tint Calibration (Passcode 250)	FULL 2400K ...

8. DMX channel table:

Basic	Standard	Extend	Value	Function
1	1	1	0~255	Pan
				Left → Right
	2	2	0~255	Pan Fine
				Fine Position
2	3	3	0~255	Tilt
				Forward → Backward
	4	4	0~255	Tilt Fine
				Fine Position
3	5	5	**Pan Rotation**	
			0-2	Disabled
			3-127	Clockwise Fast → Slow
			128	Stop
			129-255	Counter-clockwise Slow → Fast
4	6	6	**Tilt Rotation**	
			0-2	Disabled
			3-127	Clockwise Fast → Slow
			128	Stop
			129-255	Counter-clockwise Slow → Fast
	7	7	**Pan / Tilt Speed**	
			0-255	Max → Min Speed
5	8	8	0-255	Dimmer
				0 → 100%

www.ckclighting.com

	9	9	0-255	Dimmer Fine
				Fine Adjustment
6	10	10	**Strobe**	
			0-31	Closed
			32-63	Open
			64-95	Strobe effect slow to fast
			96-127	Open
			128-159	Pulse Effect
			160-191	Open
			192-223	Random Slow → Fast
			224-255	Open
7	11		0-255	Red
				0 → 100%
8	12		0-255	Green
				0 → 100%
9	13		0-255	Blue
				0 → 100%
10	14		0-255	Lime
				0 → 100%
		11	0-255	Red 1
				0 → 100%
		12	0-255	Green 1
				0 → 100%
		13	0-255	Blue 1
				0 → 100%
		14	0-255	Lime 1
				0 → 100%
		15	0-255	Red 2
				0 → 100%
		16	0-255	Green 2
				0 → 100%
		17	0-255	Blue 2
				0 → 100%
		18	0-255	Lime 2
				0 → 100%
		19	0-255	Red 3
				0 → 100%
		20	0-255	Green 3
				0 → 100%
		21	0-255	Blue 3
				0 → 100%

		22	0-255	Lime 3
				0 → 100%
		23	0-255	Red 4
				0 → 100%
		24	0-255	Green 4
				0 → 100%
		25	0-255	Blue 4
				0 → 100%
		26	0-255	Lime 4
				0 → 100%
11	15	27	**Variable CCT**	
			0-23	Open (6000K)
			24-85	2400K → 8500K
			86-255	8500K
12	16	28	0	CTO
			1-254	CTO fade to Color Mix
			255	Color Mix
13	17	29	**Tint**	
			0	Idle
			1-127	Full Minus Green to Neutral
			128	Neutral White
			129-255	Neutral to Full Plus Green
14	18	30	**Virtual Wheel Color Forground**	
			0	Open
			1-179	Virtual Swatch Book (See Sheet)
				Scroll
			180-201	Clockwise Fast → Slow
			202-207	Stop
			208-229	Counter-clockwise Slow → Fast
			230-234	Open
				Random Slots
			235-239	Fast
			240-244	Medium
			245-249	Slow
			250-255	Open
			Virtual Wheel Color Background	
			0	Open
			1-179	Virtual Swatch Book (See Sheet)
				Scroll
			180-201	Clockwise Fast → Slow
			202-207	Stop

www.ckclighting.com

15	19	31	208-229	Counter-clockwise Slow → Fast
			230-234	Open
				Random Slots
			235-239	Fast
			240-244	Medium
			245-249	Slow
			250-255	Open
16	20	32		**Patterns Programs**
			000-009	No Program
			010-019	Program 1
			020-029	Program 2
			030-039	Program 3
			040-049	Program 4
			050-059	Program 5
			060-069	Program 6
			070-079	Program 7
			080-089	Program 8
			090-099	Program 9
			100-109	Program 10
			110-119	Program 11
			120-129	Program 12
			130-139	Program 13
			140-149	Program 14
			150-159	Program 15
			160-169	Program 16
			170-179	Program 17
			180-189	Program 18
			190-199	Program 19
			200-209	Program 20
			210-255	No used
17	21	33	0 - 4	Static step 1
			5 - 9	Static step 2
			10 - 14	Static step 3
			15 - 19	Static step 4
			20 - 24	Static step 5
			25 - 29	Static step 6
			30 - 34	Static step 7
			35 - 39	Static step 8
			40 - 145	Chase Forward F > S
			146 - 149	Stop
			150 - 255	Chase Backward S > F
18	22	34	0-255	Programs Fade

19	23	35	0-255	Zoom
				Narrow → Wide
20	24	36		**Dimmer Modes**
			0-20	Standard
			21-40	Stage
			41-60	TV
			61-80	Architectural
			81-100	Theatre
			101-255	Default to Unit Setting
21	25	37		**Control:** Except for the Reste and Sun Protection functions,other Settings need the Shutter Channel value to be between 0 and 31 to take effect.
			0-015	No function
			016-020	Invert Pan on (Hold 3s)
			021-030	Invert Pan off (Hold 5s)
			031-035	Invert Tilt on (Hold 3s)
			036-040	Invert Tilt off (Hold 5s)
			041-045	Fan Auto (Hold 3s)
			046-050	Fan Studio (Hold 3s)
			051-055	Fan Low (Hold 3s)
			056-060	Fan High (Hold 3s)
			061-065	Linear
			066-070	Square(Default)
			071-075	Inverse Square
			076-080	S-Curve
			081-085	Led Freq. 1200 Hz (hold 3s)
			086-090	Led Freq. 3600 Hz (hold 3s)
			091-100	Led Freq. 5000 Hz (hold 3s)
			101-105	Led Freq. 10.000 Hz (hold 3s)
			106-110	Led Freq. 15.000 Hz (hold 3s)
			111-115	Led Freq. 20.000 Hz (hold 3s)
			116-120	Led Freq. 25.000 Hz (hold 3s)
			121-125	Reset Pan/Tilt (Hold 3s)
			126-130	Reset Zoom (Hold 3s)
			131-135	Reset All Functions (Hold 3s)
			136-140	Highest CRI
			141-145	Highest Output
			146-150	Bright
			151-155	Uniform
			156-160	Sun Protection ON
			161-165	Sun Protection OFF
			166-255	No function

www.ckclighting.com

Virtual Swatch Book

Value	Filter Number	Name	Value	Filter Number	Name
1	7	pale yellow	32	49	medium purple
2	103	straw	33	58	lavender
3	151	gold tint	34	199	palace blue
4	100	spring yellow	35	119	dark blue
5	10	medium yellow	36	132	medium blue
6	101	yellow	37	120	deep blue
7	104	deep amber	38	165	daylight blue
8	15	deep straw	39	161	slate blue
9	179	loving amber	40	118	light blue
10	21	gold amber	41	68	sky blue
11	105	orange	42	143	pale navy blue
12	158	deep orange	43	131	marine blue
13	22	dark amber	44	115	peacock blue
14	778	millenium gold	45	172	lagoon blue
15	135	deep golden amber	46	116	medium blue green
16	24	scarlet	47	90	dark yellow green
17	106	primary red	48	139	primary green
18	26	bright red	49	122	fern green
19	27	medium red	50	89	moss green
20	19	fire	51	124	dark green
21	157	pink	52	88	lime green
22	36	medium pink	53	138	pale green
23	111	dark pink	54	203	Quarter CT Blue
24	128	bright pink	55	202	Half CT Blue
25	148	bright rose	56	201	FULL CT Blue
26	332	special rose pink	57	200	double CT Blue
27	793	vanity fair	58	206	Quarter CT Orange
28	113	magenta	59	205	Half CT Orange
29	46	dark magenta	60	204	FULL CT Orange
30	48	rose purple	61-179		No function
31	126	mauve			

9. Control circuit diagram

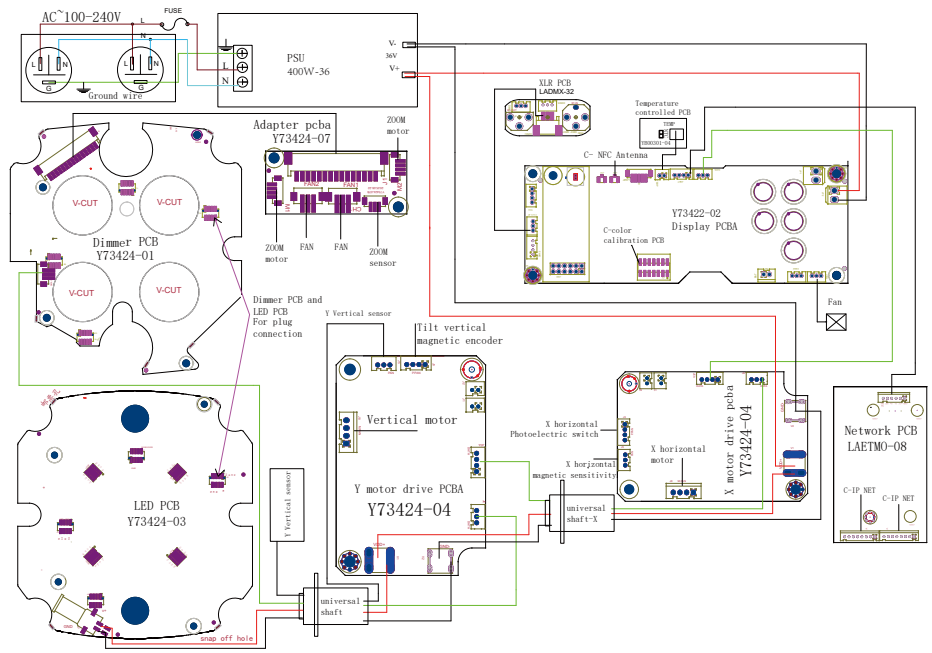

10. Regular maintenance

10.1 Cleaning and maintenance

Lighting fixtures require daily cleaning and maintenance, and their service life largely depends on the operating environment and standards. If you have any questions, please consult our technical engineers for advice. Maintenance and repair work not included in this book should be entrusted to our qualified technical engineers.

Attention! Damage caused by dust, e-liquid, or other reasons, as well as abnormal use, is not covered by the warranty.

Waining !

Before opening any lid, disconnect the power supply. Cleaning optical components requires gentle wiping as the coating surface is prone to scratching. Do not use damaging liquids or hard objects , as they may damage the plastic or coating surface.

● When the lens is cracked or otherwise damaged, it should be replaced in a timely manner;

www.ckclighting.com

● When the brightness significantly decreases, the LED may have reached its expiration date and should be replaced in a timely manner;

● When the fixture cannot start, please check if the fixture power fuse is blown. If it is blown, a fuse of the same specification must be used for installation;

● The fixture is equipped with a temperature protection device. When the temperature is too high, the protection device will automatically reduce power.

● When this situation occurs, please check whether the fan is running normally, whether the fan and fan mesh are clogged with dust, identify the fault and repair it before starting the fixture. Please note that only qualified technicians are allowed to carry out maintenance work;

● To maintain smooth movement of the focusing lens, it is recommended to lubricate the guide rail of the focusing lens every three months. Excellent and high-temperature resistant lubricating grease should be used, and excessive grease should not be used as it can easily dirty adjacent components.

10.2 Fault analysis and handling

Fault description	Analysis	Processing method
No action after power on	Check if the power switch is turned on	Turn on
	Check if the fuse is blown	Replace
	Check if the output of the psu is normal	Detecting voltage
	Check if poor contact in the internal circuit	Reconnect
Uncontrolled lighting fixtures	Check if the DMX signal cable is connected correctly (If there is no signal, the display screen will flash)	Reconnect or replace
	Check if the address code is correct and if the DMX mode of the lighting fixture matches the settings	Reconfirm
	The main control pcb is damaged	Replace
Not bright	LED aing or damaged	Replace
	Power pcb malfunction	Check/ replace
	Loose or poor contact of the circuit	Reconnect
	Switching power supply malfunction	Replace
Automatically turn off or dim the lights	LED aging	Replace
	Damaged cooling fan or abnormal wind speed	Replace
	Check the power output of the fan on the power circuit pcb	Check/ replace
	The temperature control switch is damaged	Replace
Weak light efficiency and uneven light spot	LED aging	Replace
	LED not centered with the lens	Adjust the light guide column
	The optical mirror has accumulated dust or stains	Clean
	The optical mirror is damaged	Replace
Impure color	Weakening of light efficiency	Replace led pcb
Head or base fan stops rotating	Check if the fan leads are installed properly or disconnected	Re connect
	Check if the fan is damaged	Replace
	Check if there are any other interferences within the operating range of the fan	Adjust the interference object
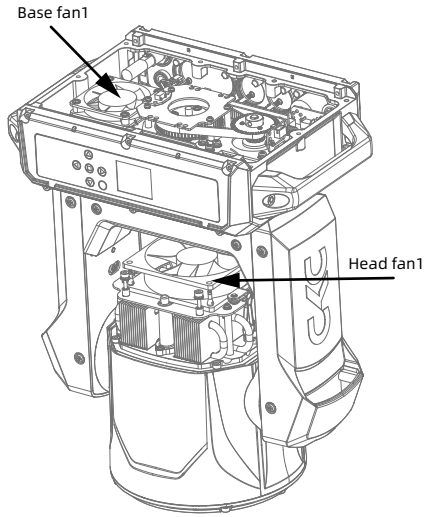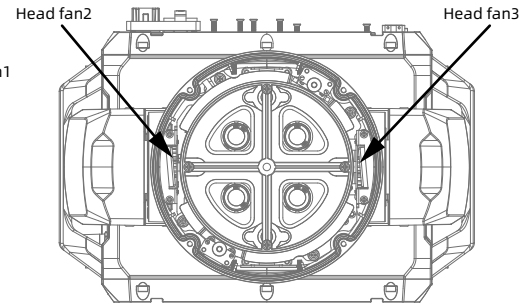
Attention! The above analysis is for abnormal reference only. Non professionals are not allowed to disassemble and repair the machine