# V15IP

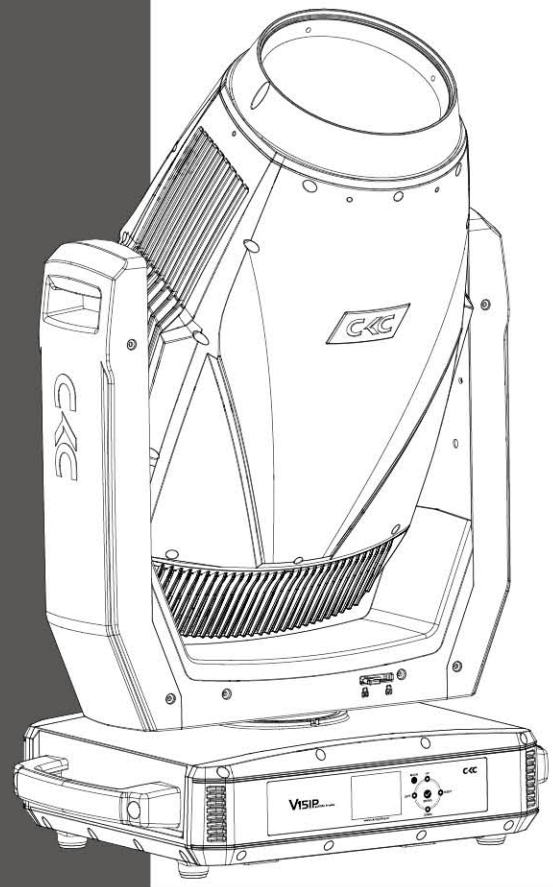

www.ckclighting.com

Before carrying out any installation, maintenance, or cleaning of the lighting fixtures, please confirm that the power has been cut off! Before using this fixture, please read this manual. Our company reserves the right to change product design and specifications without prior notice.


**CKC LIGHTING CO.,LTD**

Addr.:335 Nansha Avenue, Tung Chung Town,
Nansha District, Guangzhou City, China.
TEL：(020)3920 4506 FAX：(020)3920 4631
WEB：www.ckclighting.com

# CONTENTS


**1. Security Warning Information** 1

**2. Product Introduction** 3

2.1 Exterior dimensions 3
2.2 Fixture packaging accessories 3

**3. Main technical parameters of the equipment** 3

**4. Packaging and transportation** 11

4.1 Disassemble packaging 11
4.2 Equipment installation 11

**5. Installation Requirements Explanation** 11

5.1 Clamp installation 11
5.2 Fixture installtion 12
5.3 Hanging Installation Diagram 13

**6. Power and signal connection** 14

6.1 Power and signal socket 14
6.2 Power Connect 14
6.3 Signal Connect 15

**7. Control panel** 15

7.1 Panel Introduction 15
7.2 System menu 16

**8. DMX control channel table** 18

**9. Control circuit diagram** 23

**10. Regular maintenance** 24

10.1 Cleaning and maintenance 24
10.2 Fault analysis and handling 24

# ★ Statement ★

- This manual contains important information on safe use and installation. Please read it carefully and follow the requirements for operation and installation. Please keep this manual properly;
- The equipment has good performance and complete packaging when it leaves the factory. The operator should strictly follow the warning items and operating instructions stated in the manual. Any malfunction or damage caused by misuse or neglect of the manual is not within the scope of our company's responsibility and warranty;
- The relevant information in this manual is for reference only. All lighting products are subject to the actual product. Any changes will not be notified separately, and our company reserves the right of final interpretation.

## 1. Security Warning Information

**Attention !**

Please read the safety requirements information in this section carefully before installing, powering on, operating, or repairing the lighting fixtures.

- This product is for professional use and is not suitable for other purposes;
- After receiving the lighting fixtures, please check if the packaging is complete and unpack to check if the equipment has been damaged due to transportation. If there is any damage caused by transportation, please do not use this lamp and contact local technicians or manufacturers as soon as possible;
- When transporting again, please use the original packaging materials;
- If there is obvious damage to the machine casing, it should be replaced in a timely manner;
- When hanging lamps, it is necessary to verify that the hanging equipment can withstand more than 6 times the weight of the lamp. After installation, it is necessary to verify that the lamp cover and installation buckle are secure and undamaged. At the same time, a safety rope should be used as an auxiliary safety for the lamp and fixed on the truss;
- The light source inside this luminaire should be replaced by the manufacturer, its service agent, or a similarly qualified person;
- If you have any other questions about how to safely operate the equipment, please contact our technical personnel or call our service hotline;
- This product has a protection level of IP65 and can be used both indoors and outdoors;
- Avoid direct external strong light shining on the lens, which may cause the lens to focus and burn out internal components.

- Lighting fixtures should be kept clean and avoid prolonged use in overheated or dusty environments to prevent contact with chemical liquids;
- When using the product, attention should be paid to avoiding serious or fatal injuries caused by fire, heat, electrical shock, and ultraviolet radiation. Before powering on or installing, read the instruction manual first. Follow the safety precautions for operation and pay attention to the warning signs on the instructions and equipment;
- Only professionals are allowed to install, operate, and maintain lighting fixtures, and strictly follow the procedures stated in the operating instructions.

- The eyes cannot directly look at the luminous object;
- Do not connect this device to any dimmer;
- If visible damage occurs to the protective casing, lens, and display screen on the lighting fixture, it is considered as damage to the point of loss;
- Please do not place any filters or other items at the light outlet, and do not replace non original parts;
- The minimum safe illumination distance of the lamp is 5m.

- Before installation, please confirm that the power supply voltage used matches the voltage indicated on the light fixture. Each lighting fixture should be properly grounded and electrically installed according to relevant standards;
- Please disconnect the power before repairing or cleaning the equipment;
- During the operation of the lighting fixtures, touching the wires is prohibited to prevent electric shock;
- If the external soft cable or wire of this lamp is damaged, the wire should be replaced by the manufacturer, its agent, or a similarly qualified person to avoid danger;
- Avoid flammable liquids, water, or metal conductors from entering the interior of the lamp to prevent electric shock or fire. If any foreign objects enter the lamp, immediately cut off the power supply;
- When multiple lamps are operated in series, the signal lines can be connected in multiple ways, but the power supply must be connected separately.

- The lighting fixtures work normally at -40 °C to 45 °C . When replacing any components or accessories in the equipment, ensure that the power is disconnected to prevent electric shock and injury;
- The maximum surface temperature of the lamp during operation can reach 76 °C , please do not touch it with bare hands.

- The lighting fixtures must be installed in a sufficiently ventilated area, at least 0.5m away from adjacent surfaces, to ensure that no ventilation holes are blocked;
- Do not install the lighting fixtures directly on flammable objects;
- The minimum distance between all outer surfaces of the lamp and combustible materials is 0.5m.

www.ckclighting.com

## 2. Product Introduction

2.1 Exterior dimensions of lighting fixtures

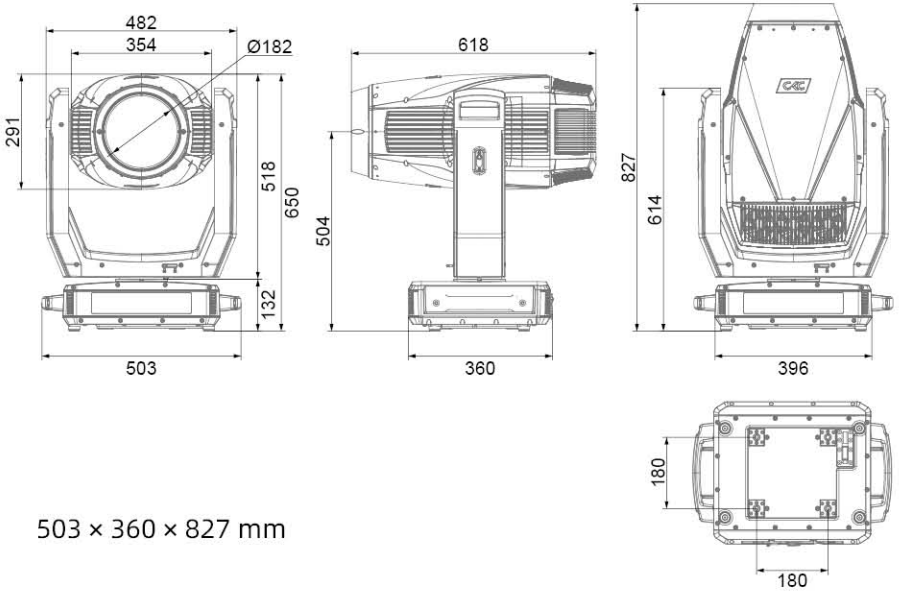


503 × 360 × 827 mm

2.2 Packaging accessories

| Name | QTY |
|---|---|
| Omega bracket | 2 PCS |
| Clamp | 2 PCS |
| Safety cable | 1 PCS |

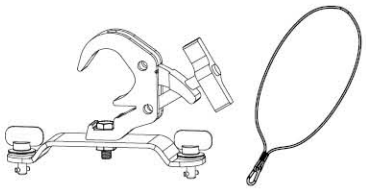

## 3. Main technical parameters of the equipment

Product execution standards：GB43472-2023、GB/T7000.1-2023、GB/T7000.217-2023

### ● Electrical parameter

Rated input voltage：AC 100V-240V~ 50Hz/60Hz
Power：1700W@220V; 1800W@100V
Power factor：0.99@220V
Input Current：8.18A@220V

### ● Source lifespan

>20000 hours

### ● Color system

CCT: 6500K
CRI： 72
Color wheel: 6+1
CMY+CTO

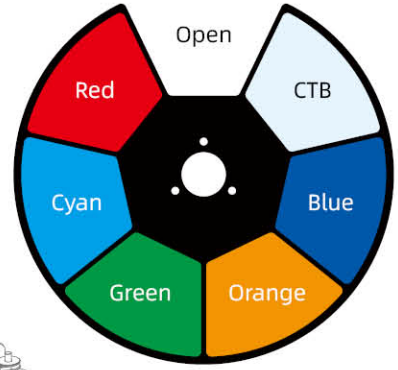


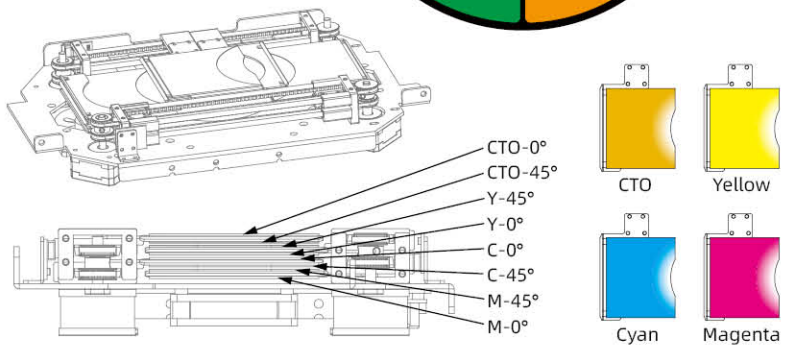


### ● Gobo system

Gobo outer diameter：30mm Internal diameter：25mm Thickness：1.1mm

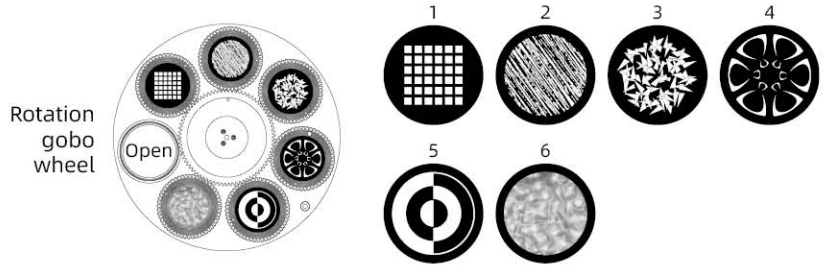


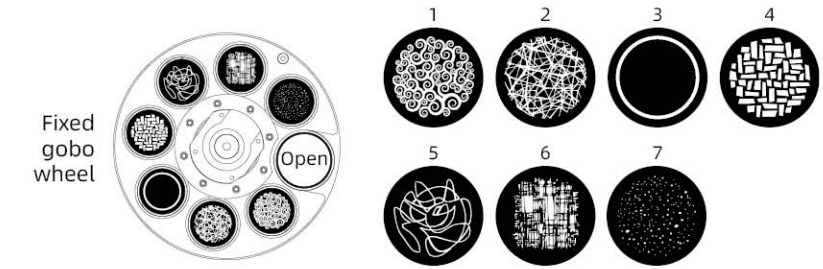

**Gobo replace**

1) Rotation gobo wheel

a). Remove the two screws at location **A**, unplug the power and signal adaptercables, and extract the Gobo component;

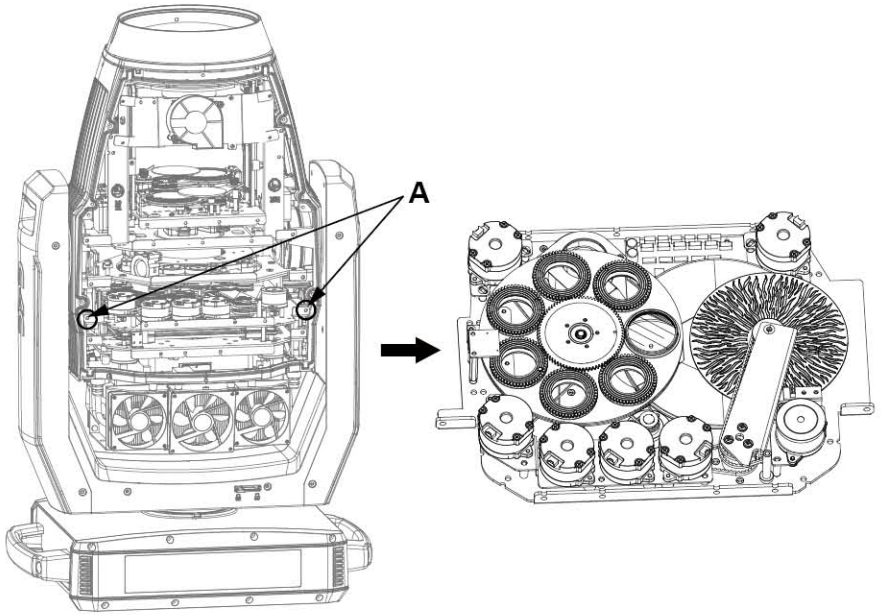


b). As shown in **B**, gently lift the driven wheel from the edge upwards from the front of the pattern plate and slowly pull it out to remove a single pattern seat;

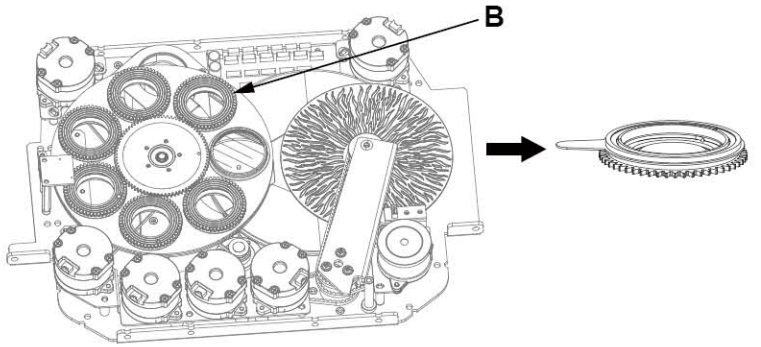


c). Use tweezers or other small grippers to remove the snap spring at point **C** (If the pattern piece is coated with glass glue for fixation, please use a professional cleaning agent to remove the glass glue before removing the snap spring to avoid damaging the gobo);

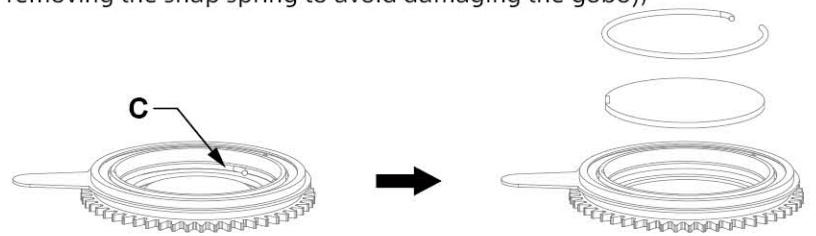


d). When assembling the gobo, avoid touching it directly with your hands. As shown in D, align the notch of the gobo with the recess of the driven wheel component (the coating surface of the gobo should face the light source);

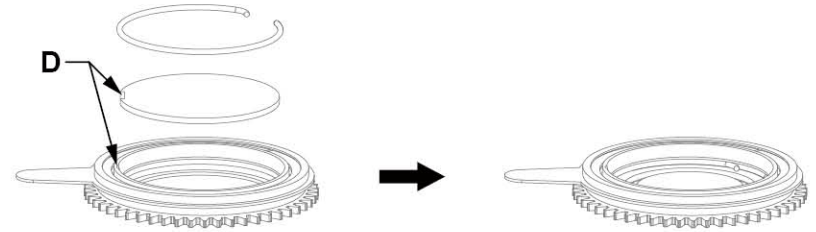


e). Insert the gobo holder into the drive wheel assembly, as shown in **E**, and reinstall the gobo holder in the order it was removed; The positioning point of the gobo holder should be aligned with the positioning point of the driving wheel; After installation, simply reinstall the gobo wheel component onto the light fixture.

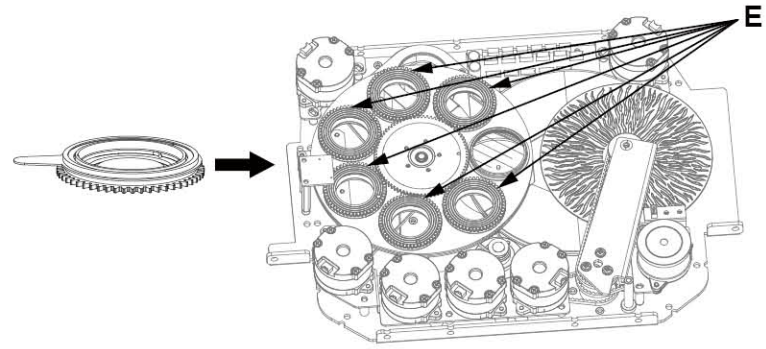

2) Fixed gobo wheel

a). Unscrew the two screws on the front **F** of the gobo wheel component and remove the magnetic sensing plate; Loosen the 6 screws at point **G** and loosen the Gobo self rotating belt (to facilitate the next step of removing the Gobo wheel component);

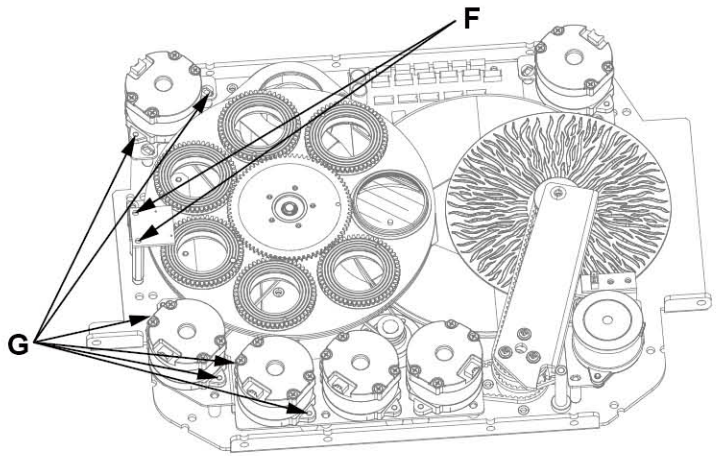


b). Reverse the components and loosen the 3 screws at **H** to loosen the belt; Unscrew the 4 screws at position **I** again to remove the gobo wheel component of the pattern disk;

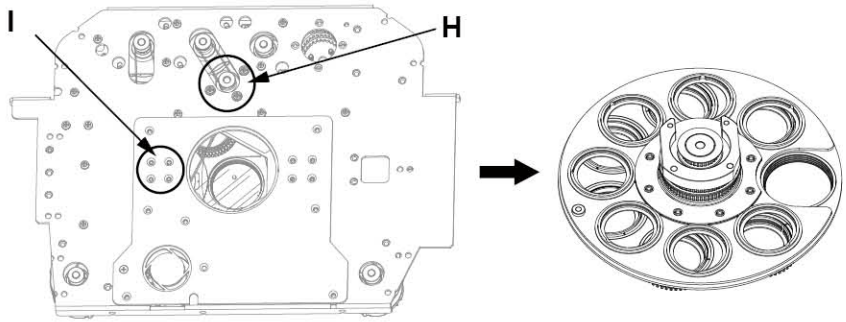


c). As shown in **J**, gently lift the gobo holder from the edge of the gobo wheel 2 and slowly pull it out to remove a single gobo holder;

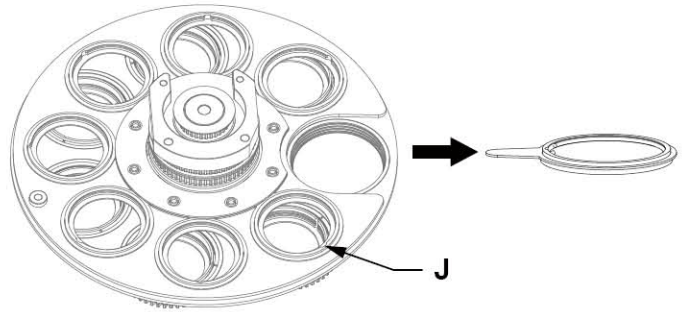


d). Use tweezers or other small grippers to remove the snap spring at point **K** (If the pattern piece is coated with glass glue for fixation, please use a professional cleaning agent to remove the glass glue before removing the snap spring to avoid damaging the gobo);

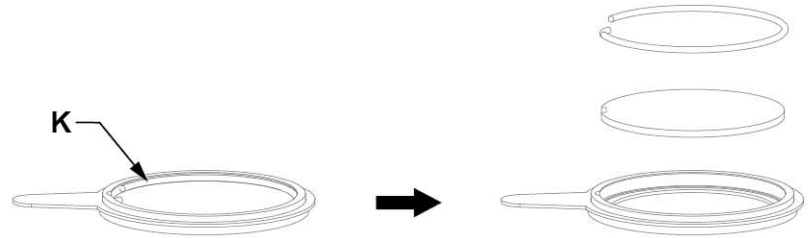


e). When assembling the gobo, avoid touching it directly with your hands. As shown in **L**, align the notch of the gobo with the recess of the driven wheel component (the coating surface of the gobo should face the light source);

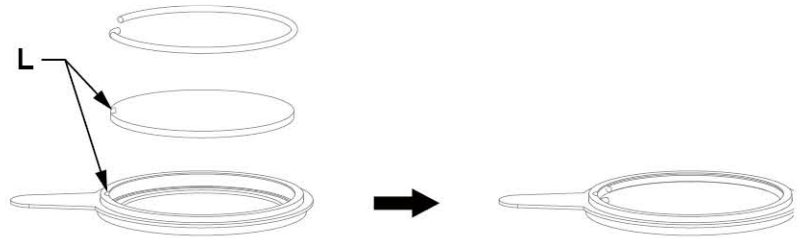

f). Insert the gobo wheel into the drive wheel assembly, as shown in **M**, and reinstall the gobo holder in the order it was removed;

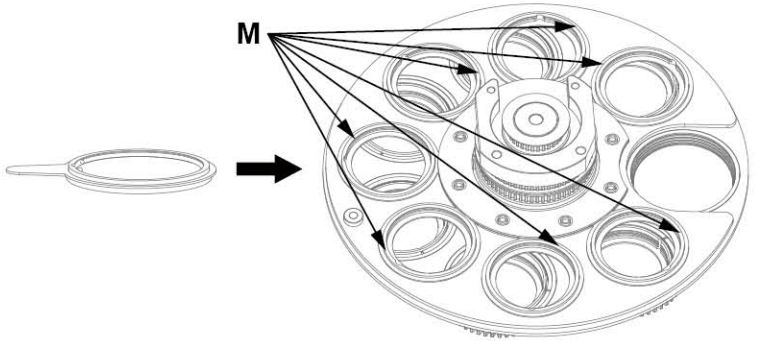


g). After installation, simply reinstall the gobo wheel component onto the light fixture.

● **Framing system**

4 gratings achieve fast and smooth cutting, and the cutting direction and angle of each grating can be controlled separately. The single grating can achieve complete light closure, and the entire frame module can rotate ±60°

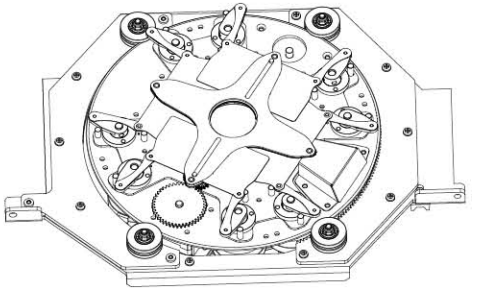

● **Animation**

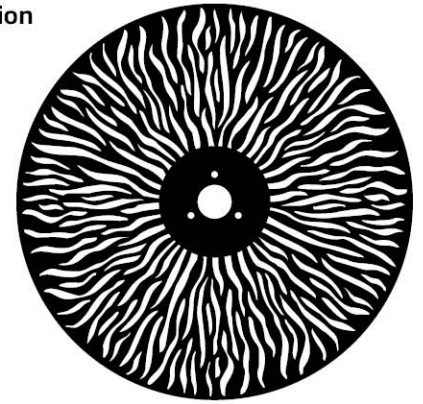

● **Prism system**

4 prism+ 6 linear

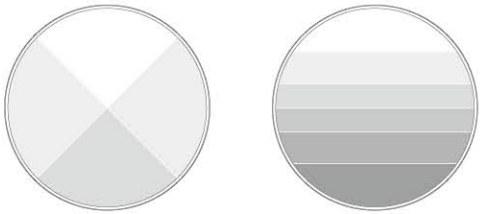

● **Pan/Tilt**

**Pan scan:**
540° or 630° 8-bit/16bit recision scanning
**Tilt scan:**
270° 8-bit/16bit precision scanning

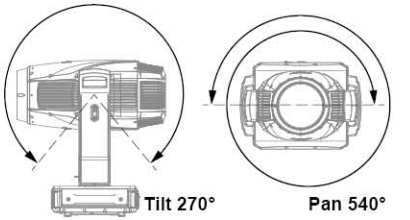


● **Optical system**

Beam angel: 6 ~ 50°
Source：1400W CW LED
Output luminous flux：52000 Lm

● **Control and programming**

Control channel：36CH/52CH
Protocol：DMX512, RDM
Data connect：3 or 5 pin signal in/out

● **Illumination draw**



● **Other effect function**

Fast electronic strobe: 1~25Hz
LED refresh frequency: 900Hz-25KHz
Frost: Light frost+heavy frost
Iris

● **Other features and functions**

Weight: 52.3 KG

## 4. Packaging and transportation

4.1 Disassemble packaging

Notice: After receiving the fixture, please unpack and check for any damage caused by transportation. If there is any damage caused by transportation, please do not use this fixture and contact the local technical personnel or manufacturer as soon as possible.

4.2 Equipment packaging

1). Disconnect the power supply before packaging the lighting fixtures to allow them to cool completely;
2). Flight cases can only be stacked in two layers and are not allowed to be reversed.

## 5. Installation Requirements Explanation

5.1 Clamp install

The lighting fixtures can be installed on the stage or on any direction of the truss, and the clamp can be quickly and easily locked onto the truss.

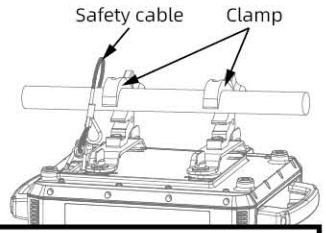


**Waining !**

The lighting fixtures are divided into two versions: integrated light hook and normal. When using the integrated light hook version, the clamp is broken up and locked onto the truss. The normal version must use 2 clamps to secure the device and fasten it with a 1/4 rotation. Regardless of the version, one safety rope must be added and connected to the base hole, but be careful not to connect it to the handling handle.

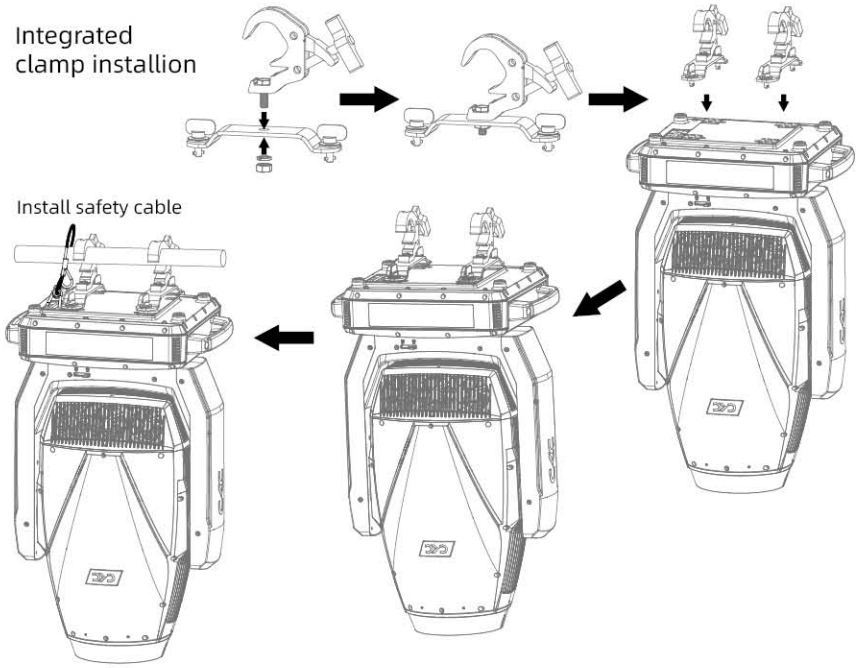


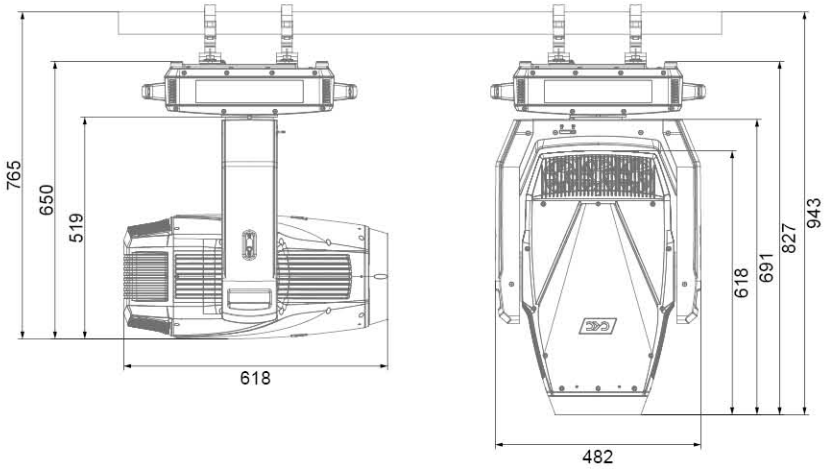


5.2 Equipment installation

1). Before installation, it is necessary to verify that the lamp hook and safety rope are not damaged, and that the installation object can withstand 6 times the total weight of the lamp and cable accessories;
2). Install the quick lock clamp on the base of the lamp body. Insert the clamp horizontally into the mounting hole of the base, rotate it clockwise 1/4 turn to lock it, and install the second clamp using the same method (the shape of the clamp should be based on the actual product).

5.3 Hanging Installation Diagram

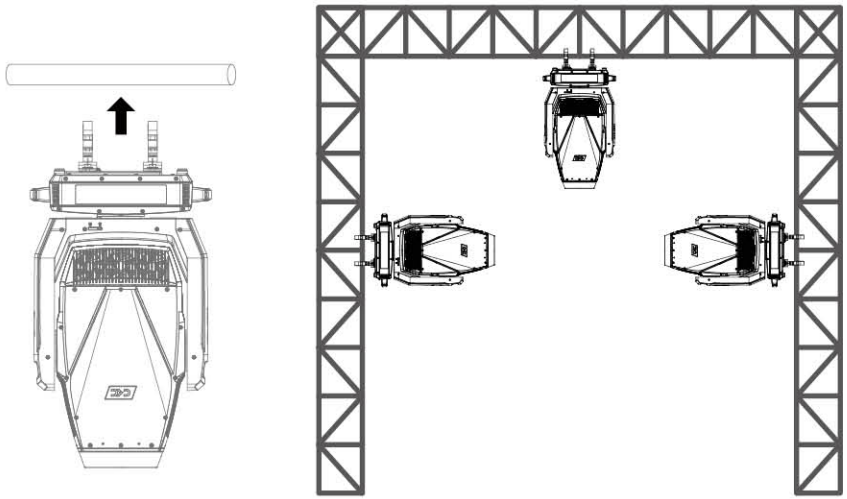

**Reminder:** External beam source may damage internal lighting fixtures

External beams from direct sunlight, lighting fixtures, and lasers that are directly focused onto the casing or penetrate the lens to illuminate the interior of the fixture may cause damage to the components. This is a common issue with all lighting fixtures and does not occur alone with CKC products. Although there is no way to completely prevent this problem from occurring, following the following guidelines can prevent potential damage.

**When unpacking, installing, using, and stopping the operation of the lighting fixtures, please do not expose the transparency of the fixtures the mirror is exposed to direct sunlight, other lighting fixtures, or laser beams,Do not directly focus the beam of this device onto another lighting fixture.**

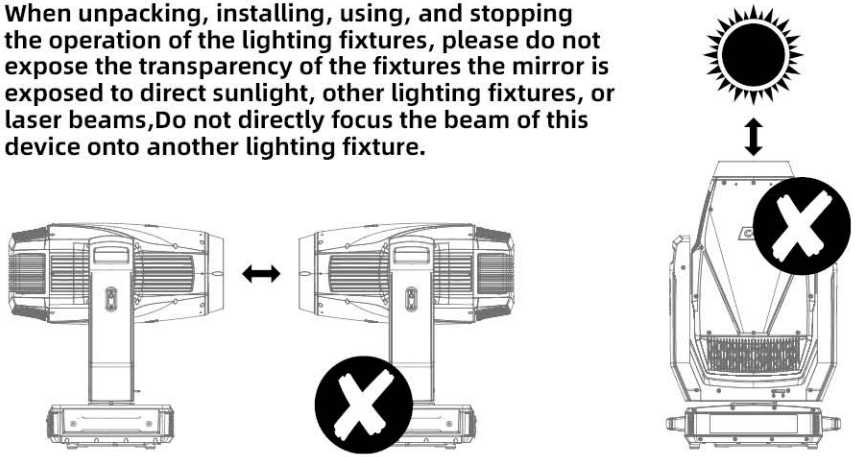

**6. Power、Signal connect**

6.1 Power and signal socket

1.Breathable valve
2.Power input
3.Fuse holder
4.DMX output
5.DMX input
6.DMX output
7. DMX input
8. USB

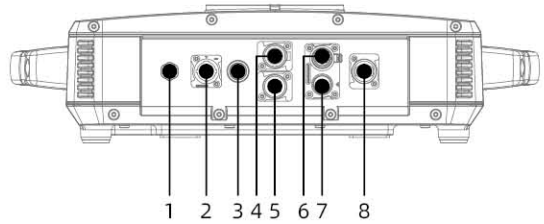


6.2 Power connect

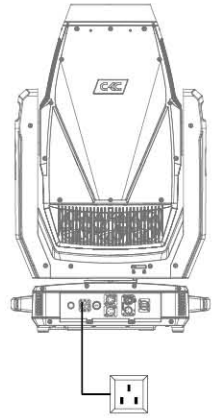

**Connection method:**

**L**(live wire) - brown wire

**E**(Ground wire) - yellow/green dual color line

**N**(Zero Line) - Blue Line

When connecting the power supply, please note that the voltage and frequency of the power supply must match the voltage and frequency marked on the light fixture. When multiple fixtures are used simultaneously, it is recommended to connect the power supply of each fixture separately, so that each fixture can be individually controlled for power on/off.

**Attention:** When connecting the power supply, the ground wire (yellow/green dual color wire) must be safely grounded and comply with all relevant electrical installation standards.



Power In

This product uses Powercon In/Out to connect power cords. Due to power limitations, a 2 square 240V power cord can carry up to 1 products.

**Waining !**

- Do not connect too many fixtures or overload a single power cord;
- Do not use power cords with damaged insulation layers, and do not place power cords on other wires;
- When the fixture is not in use or cleaned, please unplug the power cord; Do not forcefully unplug or drag the power cord directly.

6.3 Signal connect

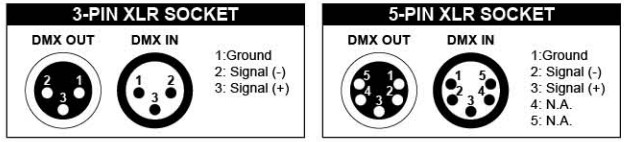


The lighting fixtures are equipped with standard DMX XLR input and output sockets. Please use DMX512 shielded twisted pair signal cables or Category 3/5 or above network twisted pair cables for connection. The typical connection distance for DMX signal lines is 150 meters. When transmitting signals over long distances, a DMX512 signal amplifier must be added.

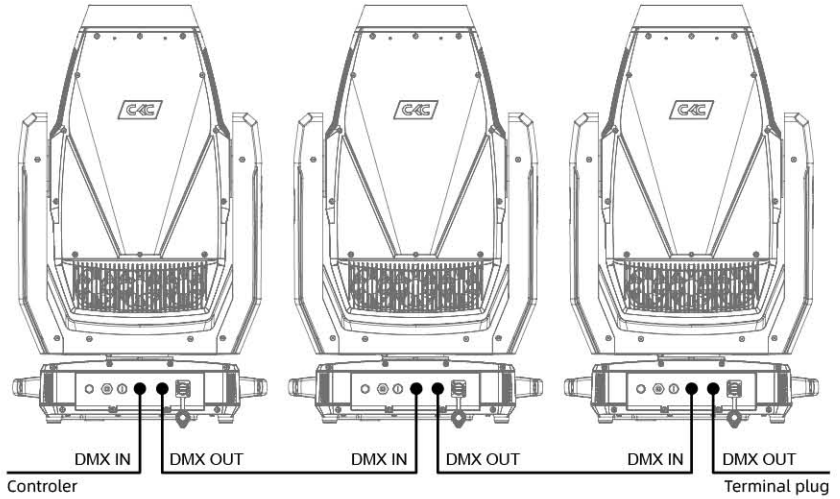


Connect a shielded twisted pair signal cable from the DMX output port of the controller to the DMX input port of the first device, and from the DMX output port of the first device to the DMX input port of the second device, and so on, until all the lamps are connected. Then install a terminal plug on the last 3 pin socket of each connected lamp output. (Weld a 4/1W, 120 Ω resistor between the 2 and 3 pins of a 3 or 5 core pin XLR plug).

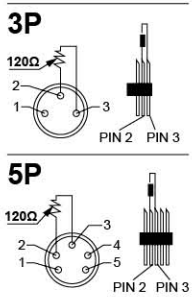


## 7. Control panel

7.1 Panel Introduction




● Adopting a 2.8 "LCD display screen, the operation panel is equipped with a rechargeable battery, which can enter the menu to set address codes and make other settings without powering on;

● Press the MODE key to view or modify the lighting function settings, and press the UP, DOWN, LEFT, and RIGHT keys to select the function menu;

● Press the ENTER key to confirm your selected function menu, which will take you to the corresponding sub menu in the menu. Each menu item represents a specific function of the lighting fixture (as shown in the table below);

● Press the ENTER key to save your modifications or enter a submenu, and press the UP or DOWN key to modify values (increase or decrease values); Press the MODE key to return to the previous menu or exit.

● Press the MODE key to return to the previous menu or exit.

7.2、System menu

Note: The gray color block is the default setting value

| | | | |
|---|---|---|---|
| Software Update<br>Please Wait...<br>CKC<br>Fixture Type Check<br>V15 IP<br>Motor Reset | | | |
| **SET** | Dmx Presets | A001~AXXX | |
| | User Mode | Standard(36CH)<br>Extend(52CH) | |
| **Function** | Status | No DMX Mode<br>P.Reverse<br>T.Reverse<br>Pan Degree<br>Feedback<br>Move.Speed<br>Hibernation<br>Follow Mode | Black/Hold/Auto<br>ON/OFF<br>ON/OFF<br>630/540<br>ON/OFF<br>Speed 1~ 4<br>OFF, 01M~99M, 15M<br>OFF/ON |
| | Dim Mode | Standard<br>Stage<br>TV<br>Architectural<br>Theatre | |
| | Temp. C/F | Celsius<br>Fahrenheit | |
| | Dim Curve | Linear<br>Square<br>Inv-Square<br>S-Curve | |
| | Frequency | 1200Hz/3600Hz/5000Hz/10KHz/15KHz/20KHz/25KHz | |

| | | | |
|---|---|---|---|
| | Fan Set | Head Fan | Auto<br>High<br>Low |
| | | Base Fan | Auto<br>High |
| | LCD.Set | Backlight<br>Flip Display<br>Key Lock<br>DispFlash<br>Language | 01~60m<br>OFF/ON<br>OFF/ON<br>OFF/ON<br>English |
| | Disp.Set | Channel Value<br>Slave Set<br>Auto.Prog | PAN.....<br>Slave1,Slave2,Slave3<br>Master / Alone |
| | DFSE | OFF/ON | |
| | USB Update | OFF/ON | |
| **Test** | Reset.M | All<br>Pan&Tilt<br>Other | |
| | Test.Chan | PAN ..... | |
| | Panel.Ctrl. | PAN =XXX<br>: | |
| | Calibrate | -Password 050-<br>PAN<br>: | |
| **Info** | Time.Info | Current(Hours)<br>Total Time(Hours)<br>Last Time(Hours)<br>Timer PIN(Password=50)<br>Clear Last (ON/OFF) | |
| | Temp. Info | Base Temp1: xxx°C<br>Base Temp2: xxx°C<br>Base Temp3: xxx°C<br>Head Temp: xxx°C<br>Led Temp: xxx°C | |
| | Fan Speed | Base Fan1:xxxx RPM<br>Base Fan2: xxxx RPM<br>Cool Fan1: xxxx RPM<br>..... | |
| | Humi.Info | BasHumi<br>HeadHumi | XXX %<br>XXX % |
| | Error. Info | Pan,Tilt..... | |
| | Model. Info | V15 IP | |
| | Software. V | 1U V1.0.X<br>2U V1.0.X<br>3U V1.0.X<br>4U V1.0.X<br>5U V1.0.X<br>6U V1.0.X<br>7U V1.0.X<br>8U V1.0.X<br>9U V1.0.X | |

**8. DMX channel table:**

| ST. | EX. | Function | Values |
|---|---|---|---|
| 1 | 1 | Pan | 000 - 255 Pan Movement (540/630) |
| 2 | 2 | Pan fine | 000 - 255 Pan Fine |
| 3 | 3 | Tilt | 000 - 255 Tilt Movement (270) |
| 4 | 4 | Tilt fine | 000 - 255 Tilt Fine |
| 5 | 5 | Dimmer | 000 - 255 Intensity 0 to 100% |
| 6 | 6 | Dimmer fine | 000 - 255 Dimmer Intensity Fine |
| 7 | 7 | Strobe functions | **Shutter, Strobe:** |
| | | | 000 - 031 Shutter closed |
| | | | 032 - 063 Shutter open |
| | | | 064 - 095 Strobe slow to fast |
| | | | 096 - 127 Shutter open |
| | | | 128 - 159 Pulse effect slow to fast |
| | | | 160 - 191 Shutter open |
| | | | 192 - 223 Random strobe slow to fast |
| | | | 224 - 255 Shutter open |
| 8 | 8 | Cyan | 000 - 255 0% to 100% |
| | 9 | Cyan Fine | 000 - 255 0% to 100% |
| 9 | 10 | Magenta | 000 - 255 0% to 100% |
| | 11 | Magenta Fine | 000 - 255 0% to 100% |
| 10 | 12 | Yellow | 000 - 255 0% to 100% |
| | 13 | Yellow Fine | 000 - 255 0% to 100% |
| 11 | 14 | CTO | 000 - 255 0% to 100% |
| | 15 | CTO Fine | 000 - 255 0% to 100% |

| | | | |
|---|---|---|---|
| | | | **Color Wheel :** |
| | | | 000 - 005 Color off (open) |
| | | | 006 - 115 Open → Color1..<br>Color6 → Open |
| | | | 116 - 120 Open |
| | | | 121 - 130 Deep Red |
| | | | 131 - 140 Medium Blue |
| | | | 141 - 150 Deep Green |
| 12 | 16 | Colour Wheel | 151 - 160 Amber |
| | | | 161 - 170 Congo Blue |
| | | | 171 - 180 CTB |
| | | | 181 - 192 Color off (open) |
| | | | 193 - 223 Color Wheel rot.<br>Slow -> Fast, CW |
| | | | 224 - 224 Color Wheel rot. Stop |
| | | | 225 - 255 Color Wheel rot.<br>Fast -> Slow, CCW |
| 13 | 17 | Colour Wheel Fine | 000 - 255 0% to 100% |
| | | | **Rotanting Gobos:** |
| | | | 000 - 005 Open |
| | | | 006 - 020 Gobo 1 |
| | | | 021 - 035 Gobo 2 |
| | | | 036 - 050 Gobo 3 |
| | | | 051 - 065 Gobo 4 |
| | | | 066 - 080 Gobo 5 |
| | | | 081 - 095 Gobo 6 |
| | | | 096 - 110 Gobo 1 shake (Slow-Fast) |
| 14 | 18 | Gobo Wheel 1 | 111 - 125 Gobo 2 shake (Slow-Fast) |
| | | | 126 - 140 Gobo 3 shake (Slow-Fast) |
| | | | 141 - 155 Gobo 4 shake (Slow-Fast) |
| | | | 156 - 170 Gobo 5 shake (Slow-Fast) |
| | | | 171 - 185 Gobo 6 shake (Slow-Fast) |
| | | | 186 - 192 Open |
| | | | 193 - 223 Gobo Wheel rot.<br>Slow -> Fast, CW |
| | | | 224 - 224 Gobo Wheel rot. Stop |
| | | | 225 - 255 Gobo Wheel rot.<br>Fast -> Slow, CCW |

| | | | |
|---|---|---|---|
| | | | **Rotanting Gobo Index:** |
| | | | 000 - 005 Gobo1 Rot. Off |
| | | | 006 - 128 Gobo Position 0° ... 540° |
| 15 | 19 | Gobo 1 Rotation | 129 - 191 Gobo Rotation,<br>Slow -> Fast, CW |
| | | | 192 - 192 Gobo Rotaion Stop |
| | | | 193 - 255 Gobo Rotation,<br>Fast -> Slow, CCW |
| 16 | 20 | Gobo 1 Rotation fine | 000 - 255 Gobo indexing fine |
| | | | **Fixed Gobo:** |
| | | | 000 - 005 Open |
| | | | 006 - 018 Gobo 1 |
| | | | 019 - 031 Gobo 2 |
| | | | 032 - 044 Gobo 3 |
| | | | 045 - 057 Gobo 4 |
| | | | 058 - 070 Gobo 5 |
| | | | 071 - 083 Gobo 6 |
| | | | 084 - 096 Gobo 7 |
| | | | 097 - 109 Gobo 1 shake (slow-fast) |
| 17 | 21 | Gobo Wheel 2 | 110 - 122 Gobo 2 shake (slow-fast) |
| | | | 123 - 135 Gobo 3 shake (slow-fast) |
| | | | 136 - 148 Gobo 4 shake (slow-fast) |
| | | | 149 - 161 Gobo 5 shake (slow-fast) |
| | | | 162 - 174 Gobo 6 shake (slow-fast) |
| | | | 175 - 187 Gobo 7 shake (slow-fast) |
| | | | 188 - 192 Open |
| | | | 193 - 223 Gobo Wheel rot.  Slow -> Fast, CW |
| | | | 224 - 224 Gobo Wheel rot. Stop |
| | | | 225 - 255 Gobo Wheel rot. Fast -> Slow, CCW |
| 18 | 22 | Zoom | 000 - 255 Narrow to wide |
| | 23 | Zoom fine | 000 - 255 Narrow to wide |
| 19 | 24 | Focus | 000 - 255 0% to 100% |
| | 25 | Focus fine | 000 - 255 0% to 100% |
| | | | **Iris:** |
| | | | 000 - 225 Open - Close |
| 20 | 26 | Iris | 226 - 235 Pulse up, Slow -> Fast |

| | | | |
|---|---|---|---|
| | | | 236 - 245 Pulse dowm, Slow -> Fast |
| | | | 246 - 255 Random effect, Slow -> Fast |
| 21 | 27 | Prism Wheel | **Prism Wheel:** |
| | | | 000 - 005 No Prism |
| | | | 006 - 130 Prism 1 (6 Liner prism) |
| | | | 131 - 255 Prism 2 (4 Facet prism) |
| 22 | 28 | Prism rotation | **Prism rotation:** |
| | | | 000 - 005 Prism Rot. Off |
| | | | 006 - 128 Prism Position 0 ... 540° |
| | | | 129 - 191 Prism Rotation, Slow -> Fast, CW |
| | | | 192 - 192 Prism Rotation Stop |
| | | | 193 - 255 Prism Rotation, Fast -> Slow, CCW |
| 23 | 29 | Frost 1 | 000 - 255 0% to 100% |
| 24 | 30 | Frost 2 | 000 - 255 0% to 100% |
| 25 | 31 | Effect Wheel | **Animation1:** |
| | | | 000 - 005 Wheel Rot. Off |
| | | | 006 - 128 Wheel Position 0 ... 540° |
| | | | 129 - 191 Wheel rot. Slow -> Fast, CW |
| | | | 192 - 192 Wheel rot. Stop |
| | | | 193 - 255 Wheel rot. Fast -> Slow, CCW |
| 26 | 32 | Blade 1A | 000 - 255 0% - 100% |
| | 33 | Blade 1A fine | 000 - 255 0% - 100% |
| 27 | 34 | Blade 1B | 000 - 255 0% - 100% |
| | 35 | Blade 1B fine | 000 - 255 0% to 100% |
| 28 | 36 | Blade 2A | 000 - 255 0% to 100% |
| | 37 | Blade 2A fine | 000 - 255 0% to 100% |
| 29 | 38 | Blade 2B | 000 - 255 0% to 100% |
| | 39 | Blade 2B fine | 000 - 255 0% to 100% |
| 30 | 40 | Blade 3A | 000 - 255 0% to 100% |
| | 41 | Blade 3A fine | 000 - 255 0% to 100% |
| 31 | 42 | Blade 3B | 000 - 255 0% to 100% |
| | 43 | Blade 3B fine | 000 - 255 0% to 100% |
| 32 | 44 | Blade 4A | 000 - 255 0% to 100% |
| | 45 | Blade 4A fine | 000 - 255 0% to 100% |
| 33 | 46 | Blade 4B | 000 - 255 0% to 100% |
| | 47 | Blade 4B fine | 000 - 255 0% to 100% |

| | | | |
|---|---|---|---|
| 34 | 48 | Shape Rotation | 000 - 255 Rotation from 0 to 120° |
| | 49 | Shape Rotation Fine | 000 - 255 0% to 100% |
| | 50 | Pan/Tilt Speed | 000 - 255 Pan/Tilt Fast -> Slow |
| 35 | 51 | Set dimmer Mode | **Dimmer Mode:** |
| | | | 000 - 020 Standard |
| | | | 021 - 040 Stage |
| | | | 041 - 060 TV |
| | | | 061 - 080 Architectural |
| | | | 081 - 100 Theater |
| | | | 101 - 255 Default to unit setting |
| 36 | 52 | Device settings | **Device settings:** |
| | | | 000 - 006 No function |
| | | | 007 - 017 Invert Pan on (Hold 3s) |
| | | | 018 - 029 Invert Pan off (Hold 5s) |
| | | | 030 - 041 Invert Tilt on (Hold 3s) |
| | | | 042 - 053 Invert Tilt off (Hold 5s) |
| | | | 054 - 065 Fan Auto (Hold 3s) |
| | | | 066 - 070 Fan Silent (Hold 3s) |
| | | | 071 - 077 Fan Hihg (Hold 3s) |
| | | | 078 - 089 Linear Dimmer Curve (hold 3s) |
| | | | 090 - 101 Square Dimmer Curve (hold 3s) |
| | | | 102 - 113 Inv-Square Dimmer Curve (hold 3s) |
| | | | 114 - 125 S - Dimmer Curve (hold 3s) |
| | | | 126 - 137 Led Freq. 1200 Hz (hold 3s) |
| | | | 138 - 149 Led Freq. 3600 Hz (hold 3s) |
| | | | 150 - 161 Led Freq. 5000 Hz (hold 3s) |
| | | | 162 - 173 Led Freq. 10.000 Hz (hold 3s) |
| | | | 174 - 185 Led Freq. 15.000 Hz (hold 3s) |
| | | | 186 - 197 Led Freq. 20.000 Hz (hold 3s) |
| | | | 198 - 209 Led Freq. 25.000 Hz (hold 3s) |
| | | | 210 - 221 Reset Pan/Tilt (Hold 3s) |
| | | | 222 - 233 Reset only Head (Hold 3s) |
| | | | 234 - 255 Reset All Functions (Hold 3s) |

## 9. Control circuit diagram

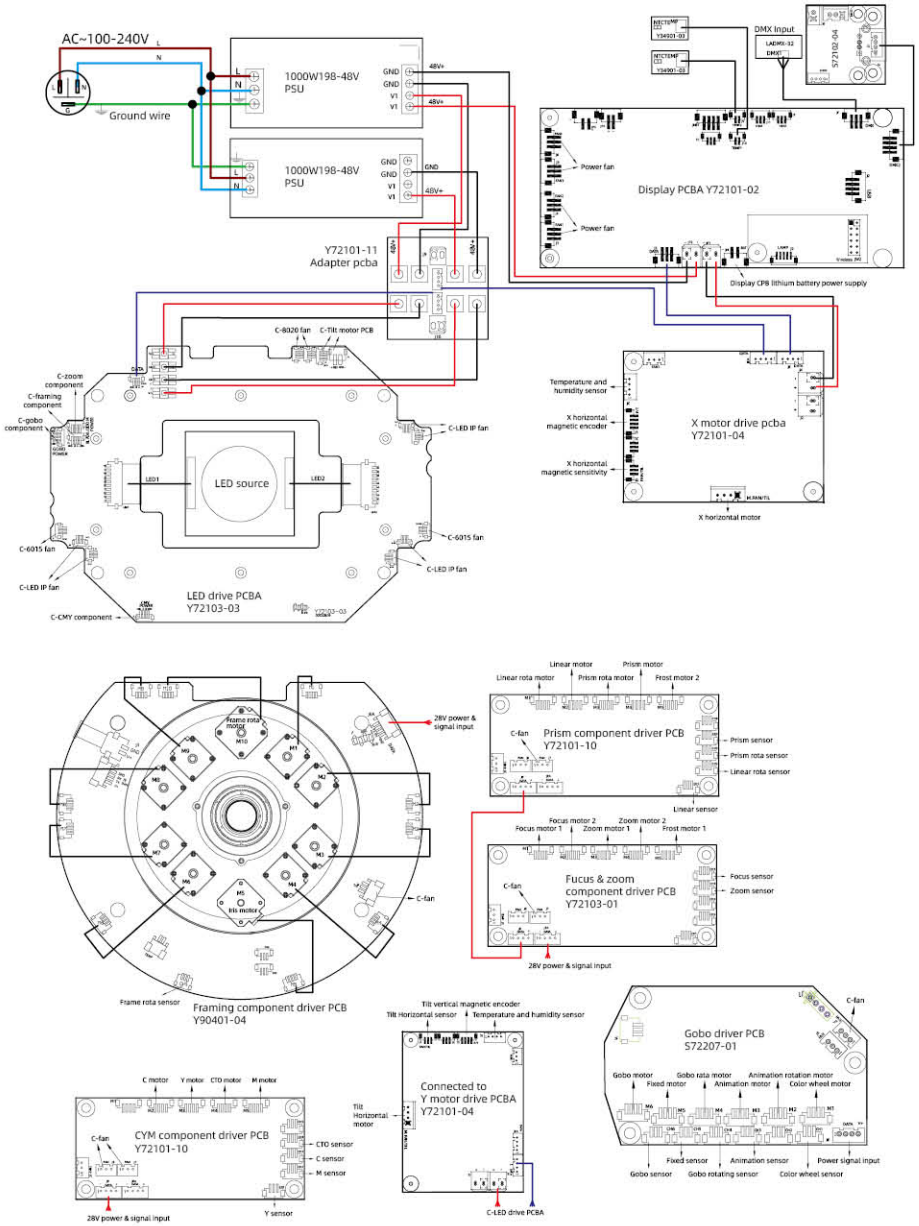


## 10. Regular maintenance

### 10.1 Cleaning and maintenance

Lighting fixtures require daily cleaning and maintenance, and their service life largely depends on the operating environment and standards. If you have any questions, please consult our technical engineers for advice. Maintenance and repair work not included in this book should be entrusted to our qualified technical engineers.

**Attention!** Damage caused by dust, e-liquid, or other reasons, as well as abnormal use, is not covered by the warranty.

**Waining !**

Before opening any lid, disconnect the power supply. Cleaning optical components requires gentle wiping as the coating surface is prone to scratching. Do not use damaging liquids or hard objects , as they may damage the plastic or coating surface.

- When the lens is cracked or otherwise damaged, it should be replaced in a timely manner;
- When the brightness significantly decreases, the LED may have reached its expiration date and should be replaced in a timely manner;
- When the fixture cannot start, please check if the fixture power fuse is blown. If it is blown, a fuse of the same specification must be used for installation;
- The fixture is equipped with a temperature protection device. When the temperature is too high, the protection device will automatically reduce power.
- When this situation occurs, please check whether the fan is running normally, whether the fan and fan mesh are clogged with dust, identify the fault and repair it before starting the fixture. Please note that only qualified technicians are allowed to carry out maintenance work;
- To maintain smooth movement of the focusing lens, it is recommended to lubricate the guide rail of the focusing lens every three months. Excellent and high-temperature resistant lubricating grease should be used, and excessive grease should not be used as it can easily dirty adjacent components.

### 10.2 Fault analysis and handling

| Fault description | Analysis | Processing method |
|---|---|---|
| No action after power on | Check if the power switch is turned on | Turn on |
| | Check if the fuse is blown | Replace |
| | Check if the output of PSU is normal | Detecting voltage |
| | Check if poor contact in the internal circuit | Reconnect |

| | | |
|---|---|---|
| Uncontrolled lighting fixtures | Check if the DMX signal cable is connected correctly (If there is no signal, the display screen will flash) | Reconnect or replace |
| | Check if the address code is correct and if the DMX mode of the lighting fixture matches the settings | Reconfirm |
| | The main control PCB is damaged | Replace |
| Not bright | LED aging or damage | Replace |
| | Power PCB malfunction | Check/ Replace |
| | Loose or poor contact of the circuit | Reconnect |
| | PSU malfunction | Replace |
| Automatically turn off or dim the lights | LED aging | Replace |
| | Damaged cooling fan or abnormal wind speed | Replace |
| | Check the power output of the fan | Check/ Replace |
| | The temperature control switch is damaged | Replace |
| Gobo wheel misalignment or abnormal control | Poor contact of motor wire | Reconnect |
| | Corresponding motor drive board malfunction | Refixed |
| | Misalignment or magnetic damage between the magnetic tube and the positioning magnet | Adjust/Replace |
| | Motor malfunction | Replace |
| Weak light efficiency and uneven light spot | LED aging | Replace |
| | LED not centered with the lens | Adjust LED |
| | The optical mirror has accumulated dust or stains | Clean |
| | The optical mirror is damaged | Replace |
| Impure color | Weakening of light efficiency | Replace led PCB |
| | The color filter has accumulated dust or stains | Clean |
| | The color filter has been demolded or damaged | Replace |

| | | |
|---|---|---|
| Gobo is unclear | The optical mirror has accumulated dust or stains | Clean |
| | The optical mirror is damaged | Replace |
| Head or base fan stops rotating | Check if the fan leads are installed properly or disconnected | Re connect |
| | Check if the fan is damaged | Replace |
| | Check if there are any other interfering objects within the operating range of the fan | Adjust |

**Attention!** The above analysis is for abnormal reference only. Non professionals are not allowed to disassemble and repair the machine

